GV-D300/D300E/D900/D900E

SERVICE MANUAL

Self Diagnostics Supported model

Ver 1.6 2003.06

With SUPPLEMENT-1 (9-974-068-81)
With SUPPLEMENT-2 (9-974-068-82)
With CORRECTION-2 (9-974-068-92)
With SUPPLEMENT-3 (9-974-068-83)

VIDEO WALKMAN

Cassette Memory

Photo: GV-D900E

US Model
Canadian Model
GV-D300/D900
AEP Model
UK Model
E Model
GV-D300E/D900E

D200 MECHANISM

GV-D300/D900: NTSC
GV-D300E/D900E: PAL

Function difference table

Function \ Model	GV-D300/300E	GV-D900/D900E
LCD	—	5.5 inches

For MECHANISM ADJUSTMENTS, refer to the "DV MECHANICAL ADJUSTMENT MANUAL Ⅰ D MECHANISM " (original: 9-973-815-11), supplement: 9-973-815-81) and "DV MECHANICAL ADJUSTMENT MANUAL Ⅲ D200 MECHANISM " (original: 9-973-981-11).

SPECIFICATIONS

VCR

System

Video recording system
Two rotary heads, Helical scanning system
Audio recording system
Rotary heads, PCM system
Quantization: 12bits (Fs 32kHz, stereo 1, stereo 2), 16bits (Fs 48kHz, stereo)
Video signal
NTSC color, EIA standards (GV-D300/D900)
PAL colour, CCIR standards (GV-D300E/D900E)
Usable cassette
Mini DV cassette with logo printed
Tape speed
SP: Approx. 18.83 mm/s
LP: Approx. 12.57 mm/s
Recording/playback time
SP mode: 1 hour (DVM60)
LP mode: 1.5 hours (DVM60)
Fastforward/rewind time
Approx. 2 min. 30 s (DVM60)

LCD screen (GV-D900/D900E)

Picture
5.5 inches measured diagonally
3 1/4 to 2 3/8 in. (80.7 x 58.9 mm)
On-screen display
TN LCD/TFT active matrix method
Total dot number
224,640 (940 x 234)

Input and output connectors

S video input/output
4-pin mini DIN
Luminance signal: 1 Vp-p, 75 ohms, unbalanced, sync negative
Chrominance signal:
0.286 Vp-p (GV-D300/D900)
0.3 Vp-p (GV-D300E/D900E)
75 ohms, unbalanced
Video input/output
Phono jack, 1 Vp-p, 75 ohm, unbalanced, sync negative
Audio input/output
327 mV, (at output impedance less than 1 kohm)
DV input/output
4-pin special connector
Headphones jack
Stereo mini jack (ø 3.5 mm)
LANC jack
Stereo miniminijack (ø 2.5 mm)

LASER LINK

Video/audio
IR space transmisssion system according to EIAJ (Electric Industries Association of Japan) standards
Audio carrier wave
Lch : 4.3 MHz
Rch : 4.8 MHz

General

Power requirements
7.2 V (battery pack)
8.4 V (AC adaptor/charger)
Average power consumption
Recording: 10.9 W (GV-D900/D900E)
6.2 W (GV-D300/D300E)
Playback: 10.2 W (GV-D900/D900E)
5.5 W (GV-D300/D300E)
Operating temperature
32°F to 104°F (0°C to 40°C)
Storage temperature
–4°F to +140°F (–20°C to +60°C)
Dimensions
Approx. 5 7/8 × 2 1/2 × 5 3/8 in. (w/h/d) (148 × 62 × 135 mm) (GV-D900/D900E)
Approx. 5 7/8 × 1 7/8 × 5 3/8 in. (w/h/d) (148 × 48 × 135 mm) (GV-D300/D300E)
Mass
Approx. : 2 lb 2 oz (970 g) (GV-D900/D900E)
1 lb 5 oz (610 g) (GV-D300/D300E)
excluding the battery pack, lithium battery, cassette, and shoulder strap
Speaker (GV-D900/D900E)
Dynamic-speaker
Supplied accessories
See page 2.

AC adaptor/charger

Power requirements
100 to 240 V AC, 50/60 Hz
Power consumption
25 W
Output voltage
DC OUT: 8.4 V, 2.0 A in operating mode
Battery charge terminal: 8.4 V, 1.4 A in charge mode
Application
Sony battery pack NP-F730, NP-730H (GV-D300/D900E only), NP-F750, NP-F930, NP-F950 lithium ion type
Operating temperature
32°F to 104°F (0°C to 40°C)
Storage temperature
–4°F to +140°F (–20°C to +60°C)
Dimensions
Approx. 5 × 2 3/16 × 3 3/4 in. (127 × 55 × 95 mm) (w/h/d)
Mass
Approx. 9 oz (255 g)

Design and specifications are subject to change without notice.

DIGITAL VIDEO CASSETTE RECORDER

MICROFILM

SONY®

Supplied Accessories

Check that the following accessories are supplied with your VCR.

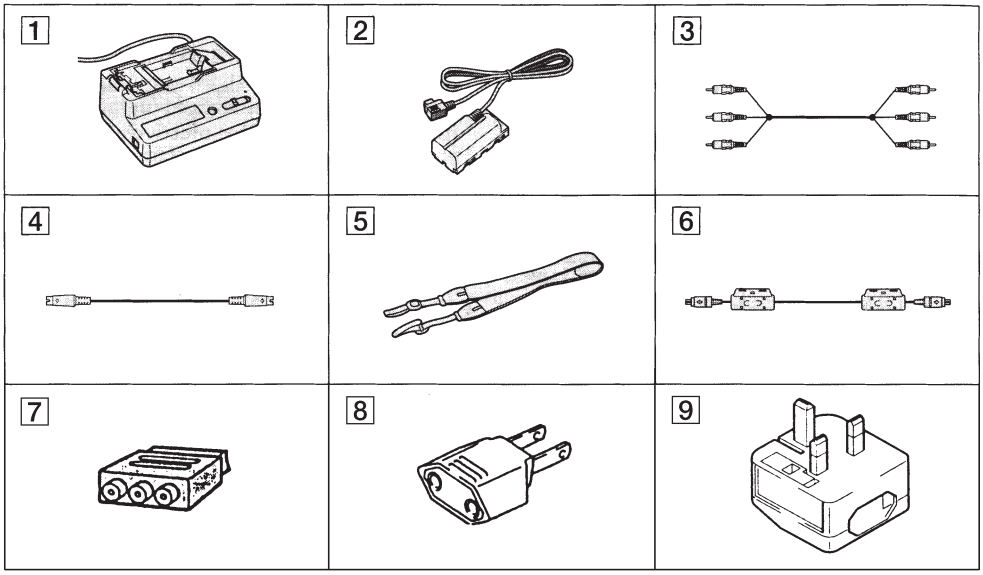

1 **AC-V700 AC adaptor/charger** (1)
The shape of the plug varies from region to region.

2 **DK-415 connecting cord** (1)

3 **A/V connecting cable** (1)

4 **S video cable**(1)

5 **Shoulder strap** (1)

6 **DV cable** (1)

7 **21-pin adaptor** (1)
(GV-D300E: AEP, UK/D900E: AEP, UK)

8 **2-pin conversion adaptor** (1)
(GV-D300E: E/D900E: E)

9 **3-pin conversion adaptor** (1)
(GV-D300E: UK/D900E: UK)

SAFETY-RELATED COMPONENT WARNING!!

COMPONENTS IDENTIFIED BY MARK ⚠ OR DOTTED LINE WITH MARK ⚠ ON THE SCHEMATIC DIAGRAMS AND IN THE PARTS LIST ARE CRITICAL TO SAFE OPERATION. REPLACE THESE COMPONENTS WITH SONY PARTS WHOSE PART NUMBERS APPEAR AS SHOWN IN THIS MANUAL OR IN SUPPLEMENTS PUBLISHED BY SONY.

ATTENTION AU COMPOSANT AYANT RAPPORT À LA SÉCURITÉ!

LES COMPOSANTS IDENTIFÉS PAR UNE MARQUE ⚠ SUR LES DIAGRAMMES SCHÉMATIQUES ET LA LISTE DES PIÈCES SONT CRITIQUES POUR LA SÉCURITÉ DE FONCTIONNEMENT. NE REMPLACER CES COMPOSANTS QUE PAR DES PIÈSES SONY DONT LES NUMÉROS SONT DONNÉS DANS CE MANUEL OU DANS LES SUPPÉMENTS PUBLIÉS PAR SONY.

SAFETY CHECK-OUT

After correcting the original service problem, perform the following safety checks before releasing the set to the customer.

1. Check the area of your repair for unsoldered or poorly-soldered connections. Check the entire board surface for solder splashes and bridges.
2. Check the interboard wiring to ensure that no wires are "pinched" or contact high-wattage resistors.
3. Look for unauthorized replacement parts, particularly transistors, that were installed during a previous repair. Point them out to the customer and recommend their replacement.
4. Look for parts which, through functioning, show obvious signs of deterioration. Point them out to the customer and recommend their replacement.
5. Check the B+ voltage to see it is at the values specified.
6. Flexible Circuit Board Repairing
   - Keep the temperature of the soldering iron around 270˚C during repairing.
   - Do not touch the soldering iron on the same conductor of the circuit board (within 3 times).
   - Be careful not to apply force on the conductor when soldering or unsoldering.

TABLE OF CONTENTS

SERVICE NOTE

1. Power Supply During Repairs 5
2. How to Take a Cassette Out When the Main Power Cannot Be Turned ON (Forced Ejected) 5
3. Warning Indicators 5

SELF-DIAGNOSIS FUNCTION

1. Self-Diagnosis Function 6
2. Self-Diagnosis Display 6
3. Service Mode Display 6

3-1. Display Method 6
3-2. Switching of Backup No. 6
3-3. End of Display 6
4. Self-Diagnosis Code Table 7

1. GENERAL

This section is extracted from instruction manual. (GV-D900)

Before you begin
- Using this manual 1-1

Basic operations
- Installing the AC adaptor/charger 1-1
- Inserting a cassette 1-2
- Playing back a tape 1-2

Advanced operations
- Using alternative power sources 1-3
- Changing the mode setting 1-4
- Searching a scene 1-5
- Displaying recording data - data code function 1-6
- Watching on a TV screen 1-7
- Editing onto another tape 1-7
- Recording from a VCR or TV 1-8
- Audio dubbing 1-9
- Superimposing a title 1-9
- Making a custom title 1-10
- Labeling a cassette 1-11

Assemble editing
- What is assemble editing 1-11
- Connecting the recording VCR 1-11
- Setting the VCR to control the recording VCR 1-12
- Adjusting the timing to start recording 1-12
- Selecting scenes 1-13
- Previewing scenes 1-13
- Executing the assemble editing 1-14

Additional information
- Usable cassettes and playback modes 1-14
- Charging the vanadium-lithium battery in the VCR 1-15
- Resetting the date and time 1-15
- Notes on “InfoLITHIUM” battery pack 1-15
- Maintenance information and precautions 1-16
- Using your VCR abroad 1-17
- Trouble check 1-17
- Self-diagnosis display 1-18
- Identifying the parts 1-19
- Warning indicators 1-20

2. DISASSEMBLY

2-1. Cassette Lid Assembly 2-1
2-2. Cabinet (Bottom) Assembly, FP-571 (Lithium Battery) 2-2
2-3. MD Block Assembly, Battery Panel Assembly 2-2
2-4. CB-61, RJ-77 Boards 2-3
2-5. Control Switch Block (FK-71) 2-3
2-6. MD Block 2-4
2-7. Cabinet (R) Assembly 2-4
2-8. IR-29, IO-62 Boards 2-4
2-9. EX-34 Board 2-5
2-10. Cabinet (Upper) Assembly 2-5
2-11. LCD Display Module (GV-D900/D900E) 2-5
2-12. Circuit Boards Location 2-6

3. BLOCK DIAGRAMS

3-1. Overall Block Diagram (1) 3-1
3-2. Overall Block Diagram (2) 3-4
3-3. Power Block Diagram 3-7

4. PRINTED WIRING BOARDS AND SCHEMATIC DIAGRAMS

4-1. Frame Schematic Diagram 4-1
4-2. Printed Wiring Boards and Schematic Diagrams 4-5
- CB-61 (Chroma Process, SYNC SEP, SIG Interface, RGB Decoder, Audio, Mode Control, DC-DC Converter) Printed Wiring Board 4-7
- CB-61 (Signal Processor)(1/10) Schematic Diagram 4-14
- CB-61 (Video Input)(2/10) Schematic Diagram 4-17
- CB-61 (Chroma Process)(3/10) Schematic Diagram 4-21
- CB-61 (SYNC SEP, EVR, SIG Interface)(4/10) Schematic Diagram 4-23
- CB-61 (RGB Decoder)(5/10) Schematic Diagram 4-26
- CB-61 (Audio 1)(6/10) Schematic Diagram 4-29
- CB-61 (Audio 2)(7/10) Schematic Diagram 4-32
- CB-61 (IR Block)(8/10) Schematic Diagram 4-35
- IR-29 (IR Transmitter) Printed Wiring Board and Schematic Diagram 4-37
- CB-61 (Mode Control)(9/10) Schematic Diagram 4-40
- CB-61 (DC-DC Converter)(10/10) Schematic Diagram 4-43
- RJ-77 (REC/PB Process, RF Interface, Blocking, Mecha Con/Servo, Audio Signal Process, Mode Control) Printed Wiring Board 4-47
- RJ-77 (REC/PB Processor)(1/9) Schematic Diagram 4-51
- RJ-77 (RF Interface)(2/9) Schematic Diagram 4-56
- RJ-77 (DV Signal Process)(3/9) Schematic Diagram 4-59
- RJ-77 (Blocking, DRAM)(4/9) Schematic Diagram 4-63
- RJ-77 (ECC, TBC, CHCD)(5/9) Schematic Diagram 4-67
- FP-242, FP-584 (Tape Sensors) Flexible Boards 4-70
- RJ-77 (Audio Signal Process)(6/9) Schematic Diagram 4-72
- RJ-77 (Mecha Con/Servo)(7/9) Schematic Diagram 4-75
- Rj-77 (Audio Display)(8/9) Schematic Diagram 4-78
- Rj-77 (Mode Control)(9/9) Schematic Diagram 4-81
- IO-62 (AV In/Out) Printed Wiring Board 4-83
- IO-62 (AV In/Out, Customer Control) Schematic Diagram 4-85

• EX-34 (DC-AC Inverter)
Schematic Diagram 4-89
• EX-34 (Multi Connector, Back Light Power)
Printed Wiring Board 4-93
• FK-71 (Control Switch Block) 4-95

5. ADJUSTMENTS

5-1. Adjustment Preparations 5-1
1-1. Preparations Before Adjustment 5-1
1-1-1. List of Service Tools 5-1
5-2. Mechanism Section Adjustment 5-2
2-1. Operating Without Cassette 5-2
2-2. Tape Path Adjustment 5-2
1. Preparations for Adjustment 5-2
5-3. Electrical Adjustments 5-3
3-1. Preparations Before Adjustments 5-3
3-1-1. Equipment Required 5-3
3-1-2. Precautions on Adjusting 5-4
3-1-3. Adjusting Connectors 5-4
3-1-4. Connecting the Equipment 5-5
3-1-5. Checking the Input Signals 5-6
3-1-7. Input/Output Level and Impedance 5-6
3-1-6. Alignment Tape 5-6
3-2. Initialization of D, C Page Data 5-7
1. Initializing the D Page Data 5-7
2. Modification of D Page Data 5-7
3. D Page Table 5-7
4. Initializing the C Page Data 5-9
5. Modification of C Page Data 5-9
6. C Page Table 5-9
3-3. System Control System Adjustment 5-11
1. Battery End Adjustment (CB-61 Board) 5-11
3-4. Servo System Adjustments 5-12
1. T Reel FG Duty Adjustment (RJ-77 Board) 5-12
2. Switching Position Adjustment (RJ-77 Board) 5-12
3-5. Video System Adjustments 5-13
3-5-1. RF Block Adjustments 5-13
1. Recording Current Adjustment (RJ-77 Board) 5-13
2. PLL F_0 Adjustment (RJ-77 Board) 5-13
3. CLK DELAY Adjustment (RJ-77 Board) 5-14
4. AGC Center Level Adjustment (RJ-77 Board) 5-14
5. AEQ Adjustment (RJ-77 Board) 5-15
6. PLL Capture Range Adjustment (RJ-77 Board) 5-15
3-5-2. Clock Adjustments 5-16
1. IC1900 27MHz XTAL F_0 Adjustment (RJ-77 Board) ... 5-16
2. IC1900 VCO Operation Check (RJ-77 Board) 5-16
3. IC6101 41.85MHz VCO Operation Check (RJ-77 Board) 5-16
3-5-3. Base Band Block Adjustments 5-17
1. NPS PLL Adjustment (CB-61 Board) 5-17
2. NPS Y Level Adjustment (CB-61 Board) 5-17
3. VIDEO Output Y Level Adjustment (CB-61 Board) 5-18
4. S VIDEO Output Y Level Adjustment (CB-61 Board) 5-18
5. AGC Adjustment (CB-61 Board) 5-19
6. NPS B-Y Level Adjustment (CB-61 Board) 5-19
7. NPS R-Y Level Adjustment For PAL Model (CB-61 Board) 5-20
8. VIDEO Output Burst Level Adjustment (CB-61 Board) 5-20
9. NPS R-Y Level Adjustment For NTSC Model (CB-61 Board) 5-20
10. S VIDEO Output Chroma Level Adjustment (CB-61 Board) 5-21
11. AFC TC Adjustment (CB-61 Board) 5-21
12. AFC F_0 Adjustment (CB-61 Board) 5-22
13. Decoder APC Adjustment (CB-61 Board) 5-22
14. Decoder ACC Adjustment (CB-61 Board) 5-22
15. Decoder HUE Adjustment (CB-61 Board) 5-23
16. Y AD Clamp Adjustment (CB-61 Board) 5-23
17. CR AD Clamp Adjustment (CB-61 Board) 5-24
18. CB AD Clamp Adjustment (CB-61 Board) 5-24
19. Y AD Level Adjustment (CB-61 Board) 5-25
20. CR AD Adjustment (CB-61 Board) 5-25
21. CB AD Level Adjustment (CB-61 Board) 5-26
3-5-4. BIST Check 5-27
1. Playback System Check 5-27
2. Recording System Check 5-28
3-6. IR Transmitter Adjustments 5-29
1. IR Video Carrier Frequency Adjustment (CB-61 Board) 5-29
2. IR Video Deviation Adjustment (CB-61 Board) 5-29
3. IR Audio Deviation Adjustment (CB-61 Board) 5-30
3-7. Audio System Adjustments 5-31
1. Playback Level Check 5-31
2. Overall Level Characteristics Check 5-31
3. Overall Separation Check 5-31
4. Overall Noise Level Check 5-32
3-8. LCD System Adjustment (GV-D900/D900E) 5-33
1. LCD Initial Data Input 5-33
2. PANEL –19V Adjustment (CB-61 Board) 5-34
3. Horizontal Position Adjustment (CB-61 Board) 5-34
4. Bright Adjustment (CB-61 Board) 5-35
5. Contrast Adjustment (CB-61 Board) 5-35
6. Color Adjustment for NTSC Model (CB-61 Board) 5-36
7. HUE Adjustment for NTSC Model (CB-61 Board) 5-36
8. Burst Cleaning Adjustment For PAL Model (CB-61 Board) 5-37
9. Color Adjustment For PAL Model (CB-61 Board) 5-37
10. V-COM Adjustment (CB-61 Board) 5-38
11. White Balance Adjustment (CB-61 Board) 5-38
5-4. Service Mode 5-39
4-1. Adjustment Remote Commander 5-39
1. Using the Adjustment Remote Commander 5-39
2. Precautions Upon Using the Adjustment Remote Commander 5-39
4-2. Data Process 5-40
4-3. Service Mode 5-41
1. Setting the Test Mode 5-41
2. Emergence Memory Address 5-41
2-1. EMG Code (Emergency Code) 5-41
2-2. MSW Code 5-42
3. Bit Value Discrimination 5-43
4. Switch Check (1) 5-43
5. Switch Check (2) 5-44
6. Record of Use Check 5-44

6. REPAIR PARTS LIST

6-1. Exploded Views 6-1
6-1-1. Cabinet Assembly 6-1
6-1-2. LCD Window Cabinet, Cabinet (Upper) Assembly 6-2
6-1-3. Mechanism Deck Assembly 6-3
6-1-4. Cassette Compartment and Drum Assembly 6-4
6-1-5. LS Chassis Block Section 6-5
6-1-6. Mechanism Chassis Block Section-1 6-6
6-1-7. Mechanism Chassis Block Section-2 6-7
6-2. Electrical Parts List 6-8

1. POWER SUPPLY DURING REPAIRS

In this unit, about 5 seconds after power is supplied (8.4V) to the battery terminal using the service power cord (J-6082-223-A), the power is shut off so that the unit cannot operate.
This following two methods are available to prevent this. Take note of which to use during repairs.

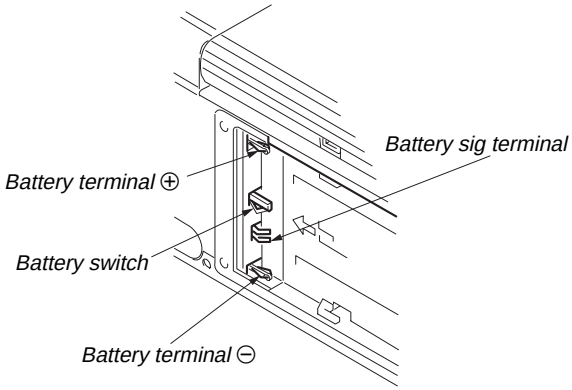

Method 1.

Connect the servicing remote commander RM-95 (J-6082-053-B) to the LANC jack, and set the remote commander switch to the "ADJ" side.

Method 2.

Press the following battery switch using adhesive tape, etc.

2. HOW TO TAKE A CASSETTE OUT WHEN THE MAIN POWER CANNOT BE TURNED ON (FORCED EJECTED)

Procedure:

1. Remove the cassette lid referring to the section "2. DISASSEMBLY, 2-1".
2. Remove the operation switch block (FK-71 board) referring to the section "2. DISASSEMBLY, 2-5".
3. Remove the CB-61 board referring to section "2. DISASSEMBLY, 2-4", and remove the FP-586 flexible board from CN3140 (4P) on the RJ-77 board.
4. Apply +4.5 V from the regulated power supply to the loading motor terminal as shown below and remove the cassette.

CAUTION: Be careful not contact with the lid frame assembly when applying +4.5 V.

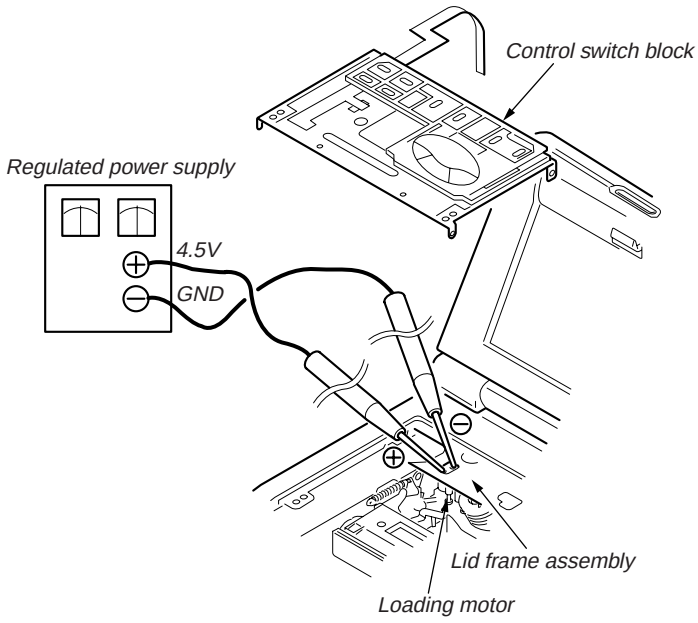

3. WARNING INDICATORS

If the CAUTION lamp flashes, but no indicators appear on the LCD screen or on the monitor TV screen, it means that an error occurs either in the fan motor or in the fan motor drive circuit. Refer to the schematic diagram on page 4-43 for repair.

SELF-DIAGNOSIS FUNCTION

1. SELF-DIAGNOSIS FUNCTION

When problems occur while the unit is operating, the self-diagnosis function starts working, and displays on the LCD screen or monitor TV (Note) what to do. This function consists of two display; self-diagnosis display and service mode display.
Details of the self-diagnosis functions are provided in the Instruction manual.

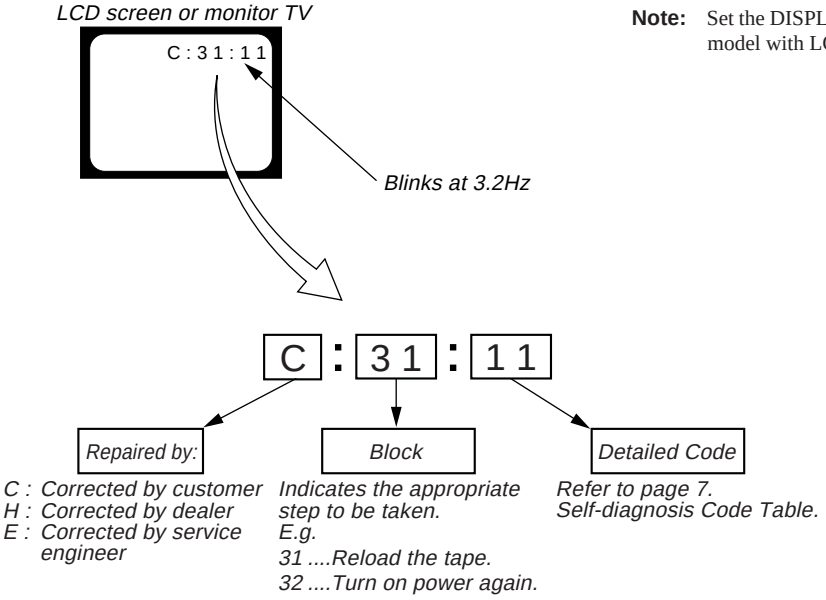
LCD screen or monitor TV
C : 3 1 : 1 1
Blinks at 3.2Hz
C : 3 1 : 1 1
Repaired by:
Block
Detailed Code
C : Corrected by customer
H : Corrected by dealer
E : Corrected by service engineer
Indicates the appropriate step to be taken.
E.g.
31 ....Reload the tape.
32 ....Turn on power again.
Refer to page 7.
Self-diagnosis Code Table.

2. SELF-DIAGNOSIS DISPLAY

When problems occur while the unit is operating, the counter of the viewfinder shows a 4-digit display consisting of an alphabet and numbers, which blinks at 3.2 Hz. This 5-character display indicates the "repaired by:", "block" in which the problem occurred, and "detailed code" of the problem.

Note: Set the DISPLAY in the menu system to V-OUT/LCD only for the model with LCD screen, and press the DISPLAY button.

3. SERVICE MODE DISPLAY

The service mode display shows up to six self-diagnosis codes shown in the past.

3-1. Display Method

While pressing the "STOP" key, set the switch from OFF to ON, and continue pressing the "STOP" key for 10 seconds continuously. The service mode will be displayed, and the counter will show the backup No. and the 5-character self-diagnosis codes.

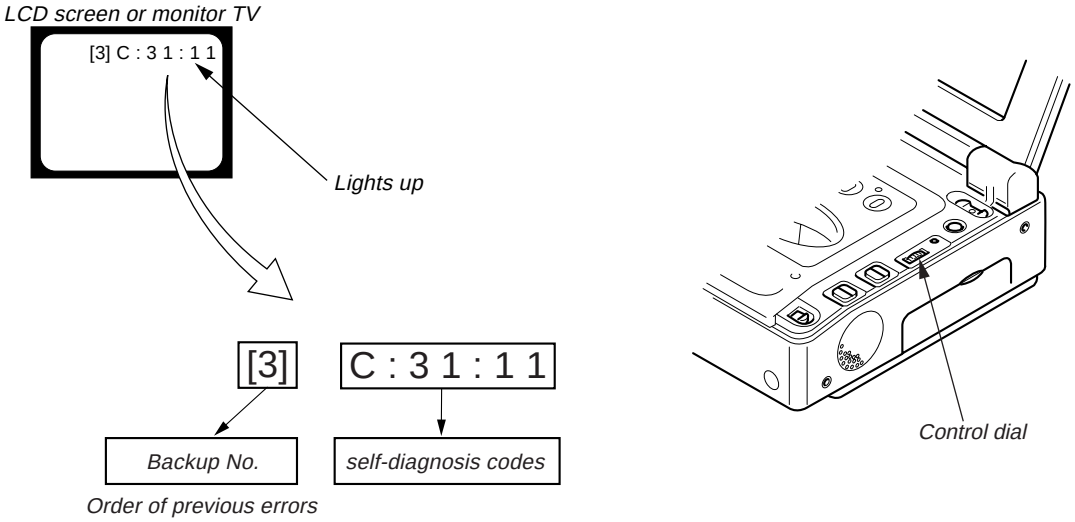

3-2. Switching of Backup No.

By rotating the control dial, past self-diagnosis codes will be shown in order. The backup No. in the [] indicates the order in which the problem occurred. (If the number of problems which occurred is less than 6, only the number of problems which occurred will be shown.)

[1] : Occurred first time
[2] : Occurred second time
[3] : Occurred third time
[4] : Occurred fourth time
[5] : Occurred fifth time
[6] : Occurred the last time

3-3. End of Display

Turning OFF the power supply will end the service mode display.

Note: The "self-diagnosis display" data will be backed up by the coin-type lithium battery of FP-571 flexible board. When this coin-type lithium battery is removed, the "self-diagnosis display" data will be lost by initialization.

4. SELF-DIAGNOSIS CODE TABLE

Self-diagnosis Code					Symptom/State	Correction
Repaired by:	Block Function		Detailed Code			
C	2	1	0	0	Condensation.	Remove the cassette, and insert it again after one hour.
C	2	2	0	0	Video head is dirty.	Clean with the optional cleaning cassette.
C	2	3	0	0	Non-standard battery is used.	Use the info LITHIUM battery.
C	3	1	1	0	LOAD direction. Loading does not complete within specified time	Load the tape again, and perform operations from the beginning.
C	3	1	1	1	UNLOAD direction. Loading does not complete within specified time	Load the tape again, and perform operations from the beginning.
C	3	1	2	0	T reel side tape slacking when unloading.	Load the tape again, and perform operations from the beginning.
C	3	1	2	1	Winding S reel fault when counting the rest of tape.	Load the tape again, and perform operations from the beginning.
C	3	1	2	2	T reel fault.	Load the tape again, and perform operations from the beginning.
C	3	1	2	3	S reel fault.	Load the tape again, and perform operations from the beginning.
C	3	1	2	4	T reel fault.	Load the tape again, and perform operations from the beginning.
C	3	1	3	0	FG fault when starting capstan.	Load the tape again, and perform operations from the beginning.
C	3	1	4	0	FG fault when starting drum.	Load the tape again, and perform operations from the beginning.
C	3	1	4	2	FG fault during normal drum operations.	Load the tape again, and perform operations from the beginning.
C	3	1	1	0	LOAD direction loading motor time-out.	Remove the battery or power cable, connect, and perform operations from the beginning.
C	3	1	1	1	UNLOAD direction loading motor time-out.	Remove the battery or power cable, connect, and perform operations from the beginning.
C	3	2	2	0	T reel side tape slacking when unloading.	Remove the battery or power cable, connect, and perform operations from the beginning.
C	3	2	2	1	Winding S reel fault when counting the rest of tape.	Remove the battery or power cable, connect, and perform operations from the beginning.
C	3	2	2	2	T reel fault.	Remove the battery or power cable, connect, and perform operations from the beginning.
C	3	2	2	3	S reel fault.	Remove the battery or power cable, connect, and perform operations from the beginning.
C	3	2	2	4	T reel fault.	Remove the battery or power cable, connect, and perform operations from the beginning.
C	3	2	3	0	FG fault when starting capstan.	Remove the battery or power cable, connect, and perform operations from the beginning.
C	3	2	4	0	FG fault when starting drum	Remove the battery or power cable, connect, and perform operations from the beginning.
C	3	2	4	2	FG fault during normal drum operations	Remove the battery or power cable, connect, and perform operations from the beginning.

SECTION 1
GENERAL

This section is extracted from instruction manual. (GV-D900)

Before you begin
Using this manual

Pasos previos
Uso de este manual

Welcome!

Congratulations on your purchase of this Sony "Video Walkman" VCR.

As you read through this manual, buttons and settings on the VCR are shown in capital letters. e.g., Set the POWER switch to ON.

Note on Cassette Memory

This VCR is based on the DV format. You can only use mini DV cassettes with this VCR. We recommend you to use a tape with cassette memory CIH.

The functions which depend on whether the tape has the cassette memory or not are:
- Date Search (p. 21)
- Photo Search (p. 24)

The functions you can operate only with the cassette memory are:
- Title Search (p. 23)
- Superimposing a title (p. 38)
- Making a custom title (p. 42)
- Labeling a cassette (p. 44)

For details, see page 58.

Note on TV color systems

TV color systems differ from country to country. To view the playback picture on a TV, you need an NTSC system-based TV.

Precaution on copyright

Television programs, films, video tapes, and other materials may be copyrighted. Unauthorized recording of such materials may be contrary to the provision of the copyright laws.

¡Bienvenido!

Felicitaciones por la adquisición de esta videograbadora "Video Walkman" de Sony.

En este manual, los botones y ajustes de la videograbadora aparecen en mayúsculas. Por ejemplo: Ajuste el interruptor POWER en ON.

Nota sobre la memoria en cassette

Esta videograbadora está basada en el formato DV. Sólo es posible utilizar minicassettes DV con esta videograbadora. Se recomienda utilizar cintas con memoria en cassette CIH.

Las funciones que dependen de la disponibilidad de la cinta de memoria en cassette son las siguientes:
- Búsqueda de fechas (p. 21)
- Búsqueda de fotografías (p. 24)

Las funciones que pueden utilizarse sólo con memoria en cassette son las siguientes:
- Búsqueda de títulos (p. 23)
- Superposición de títulos (p. 38)
- Creación de títulos personalizados (p. 42)
- Etiquetado de videocassettes (p. 44)

Para más información, consulte la página 58.

Nota sobre los sistemas de color de TV

Los sistemas de color de TV varían en función del país. Para ver la imagen de reproducción en un TV, éste debe estar basado en el sistema NTSC.

Precaución sobre el copyright

Los programas de televisión, películas, cintas de video y demás materiales pueden estar protegidos por copyright. La grabación no autorizada de tales materiales puede ir en contra de lo establecido por las leyes de copyright.

Using this manual — Uso de este manual

Precautions on VCR care

- **The LCD screen is made with high-precision technology. However, black points or bright points of light (red, blue or green) may appear constantly on the LCD screen. These points are not recorded on the tape. This is not a malfunction. (Effective dots: more than 99.99%)**
- Do not let the VCR get wet. Keep the VCR away from rain and sea water. Letting the VCR get wet may cause the unit to malfunction, and sometimes the malfunction cannot be repaired **[a]**.
- Never leave the VCR exposed to temperatures above 140°F (60°C), such as in a car parked in the sun or under direct sunlight **[b]**.

Precauciones sobre los cuidados de la videograbadora

- **La pantalla LCD está fabricada con tecnología de alta precisión. No obstante, es posible que aparezcan en la misma de forma constante puntos negros o brillantes de luz (rojos, azules o verdes). Estos puntos no se graban en la cinta. Esto no es un fallo de funcionamiento (puntos efectivos: más del 99,99%).**
- No permita que la videograbadora se moje. Manténgala alejada de la lluvia y del agua marina. Si se moja, es posible que se produzcan fallos de funcionamiento que en ciertos casos no puedan repararse **[a]**.
- No exponga nunca la videograbadora a temperaturas superiores a 140°F (60°C), como en un automóvil aparcado al sol o bajo la luz solar directa **[b]**.

[a]

[b]

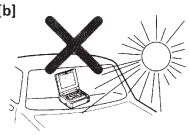

Checking supplied accessories

Comprobación de los accesorios suministrados

Check that the following accessories are supplied with your VCR.

Compruebe que ha recibido los siguientes accesorios junto con la videograbadora.

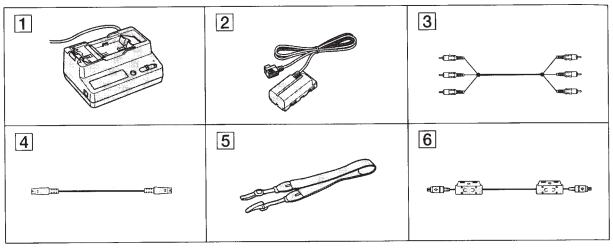

1 **AC-V700 AC adaptor/charger** (1) (p. 7, 14)
The shape of the plug varies from region to region.

2 **DK-415 connecting cord** (1) (p. 7)

3 **A/V connecting cable** (1) (p. 28, 32, 34, 47)

4 **S video cable**(1) (p. 28, 32, 34, 47)

5 **Shoulder strap** (1) (p. 84)

6 **DV cable** (1) (p. 31)

Contents of the recording cannot be compensated if recording or playback is not made due to a malfunction of the VCR, video tape, etc.

1 **Cargador/adaptador de CA AC-V700** (1) (p. 7, 14)
La forma del enchufe varía en función de la región.

2 **Cable de conexión DK-415** (1) (p. 7)

3 **Cable de conexión de A/V** (1) (p. 28, 32, 34, 47)

4 **Cable de video S** (1) (p. 28, 32, 34, 47)

5 **Asa de hombro** (1) (p. 84)

6 **Cable DV** (1) (p. 31)

El contenido de la grabación no puede compensarse si ésta o la reproducción no se realiza debido a algún fallo de funcionamiento de la videograbadora, cinta de video, etc.

Basic operations
Installing the AC adaptor/charger

Operaciones básicas
Instalación del cargador/ adaptador de CA

Use the supplied AC adaptor/charger.
(1) Set the mode change switch to VTR/CAMERA.
(2) Connect the connecting cord to the DC OUT jack on the AC adaptor/charger.
(3) Connect the power cord to a wall outlet.
(4) While pressing the connecting plate of the connecting cord, slide it to the left so that it attaches to the battery mounting surface firmly.

Emplee el cargador/adaptador de CA suministrado.
(1) Ajuste el interruptor de modo en VTR/CAMERA.
(2) Conecte el cable de conexión a la toma DC OUT del cargador/adaptador de CA.
(3) Conecte el cable de alimentación a una toma mural.
(4) Mientras presiona la placa de conexión del cable de conexión, deslícela a la izquierda de forma que quede firmemente fijada en la superficie de montaje de la batería.

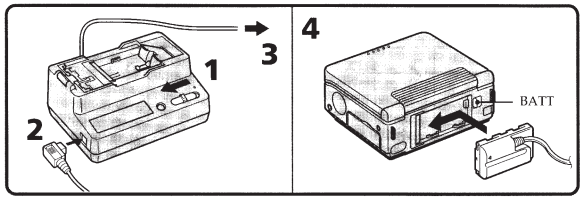

To remove the AC adaptor/charger

While pressing BATT, slide the connecting plate to the right.

PRECAUTION

The set is not disconnected from the AC power source (house current) as long as it is connected to the wall outlet, even if the set itself has been turned off.

Notes
- If you set the mode change switch to CHARGE while operating the VCR, the power supply to the VCR stops.
- You cannot change the battery pack attached to the AC adaptor/charger while supplying the power to the VCR.

Para extraer el cargador/adaptador de CA

Mientras presiona BATT, deslice la placa de conexión a la derecha.

PRECAUCIÓN

La unidad no estará desconectada de la fuente de alimentación de CA (corriente doméstica) mientras esté conectada a la toma mural, aunque la haya apagado.

Notas
- Si ajusta el interruptor de modo en CHARGE mientras emplea la videograbadora, el suministro de alimentación que ésta recibe se interrumpirá.
- No es posible cambiar el paquete de batería fijado al cargador/adaptador de CA mientras se suministra alimentación a la videograbadora.

Inserting a cassette

You can use mini DV cassette with Mini DV logo* only.
Make sure that the power source is installed.
(1) While pressing PUSH OPEN, open the LCD panel.
(2) While pressing the small blue button, slide EJECT to the right. The cassette compartment automatically lifts up and opens.
(3) Insert a cassette with the window facing up.
(4) Close the cassette compartment by pressing the PUSH mark on the cassette compartment.

* Mini DV is a trademark.

Inserción de videocassettes

Sólo es posible utilizar minicassettes DV con el logotipo Mini DV*.
Compruebe que ha instalado la fuente de alimentación.
(1) Abra el panel LCD mientras presiona PUSH OPEN.
(2) Mientras presiona el botón azul pequeño, deslice EJECT a la derecha. El compartimiento de videocassettes se eleva y se abre automáticamente.
(3) Inserte un videocassette con la ventana hacia arriba.
(4) Cierre el compartimiento de videocassettes presionando la marca PUSH del mismo.

* Mini DV es una marca comercial.

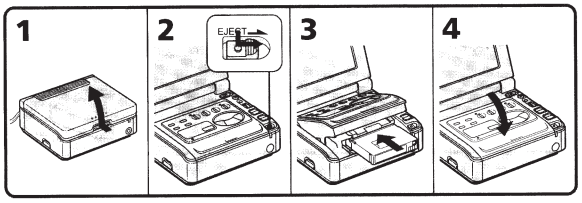

To eject the cassette

While pressing the small blue button, slide EJECT to the right.

To prevent accidental erasure

Slide the tab on the cassette to expose the red mark. If you try to record with the red mark exposed, the REC and ⏏ indicators flash on the LCD screen, and you cannot record. To re-record on this tape, slide the tab back out covering the red mark.

Para expulsar el videocassette

Mientras presiona el botón azul pequeño, deslice EJECT a la derecha.

Para evitar borrados accidentales

Deslice la lengüeta del videocassette de forma que la marca roja sea visible. Si intenta grabar con la marca roja visible, los indicadores REC y ⏏ parpadearán en la pantalla LCD y no será posible grabar en la cinta. Para volver a grabar en esta cinta, deslice la lengüeta a su posición anterior para cubrir la marca roja.

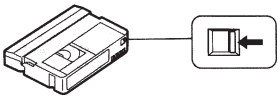

Playing back a tape

Reproducción de cintas

(1) While pressing the small green button on the POWER switch, set it to ON.
The POWER lamp (green) on the front lights up.
(2) Press ◀◀ to rewind the tape.
(3) Press ▷ to start playback.
(4) Adjust the volume using VOLUME.
You can also monitor the picture on a TV screen, after connecting the VCR to a TV or another VCR.

(1) Ajuste el interruptor POWER en ON mientras presiona el botón verde pequeño del mismo.
El indicador POWER (verde) de la parte frontal se ilumina.
(2) Presione ◀◀ para rebobinar la cinta.
(3) Presione ▷ para iniciar la reproducción.
(4) Ajuste el volumen con VOLUME.
También es posible ver la imagen en la pantalla de un TV, después de conectar la videograbadora a un TV o a otra videograbadora.

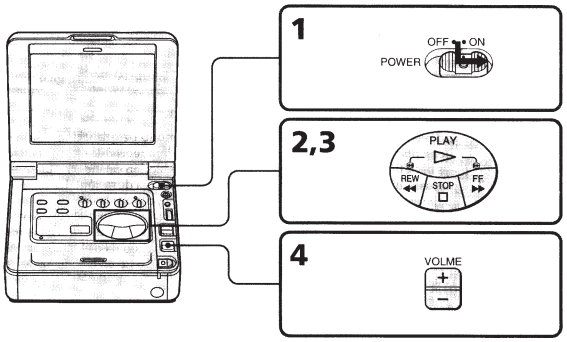

To stop playback, press □.
To rewind the tape, press ◀◀.
To fast-forward the tape rapidly, press ▶▶.
To adjust the brightness of the LCD screen, press LCD BRIGHT.

Note on DISPLAY button
Press DISPLAY to display the screen indicators. To erase the indicators, press again.

Using headphones
Connect headphones (not supplied) to the ∩ jack (p. 83). You can adjust the volume of the headphones using VOLUME.

Para detener la reproducción, presione □.
Para rebobinar la cinta, presione ◀◀.
Para que la cinta avance rápidamente, presione ▶▶.
Para ajustar el brillo de la pantalla LCD, presione LCD BRIGHT.

Nota sobre el botón DISPLAY
Presione DISPLAY para mostrar los indicadores en pantalla. Para borrarlos, vuelva a presionarlo.

Uso de auriculares
Conecte auriculares (no suministrados) a la toma ∩ (p. 83). Es posible ajustar el volumen de los auriculares con VOLUME.

Playing back a tape

Reproducción de cintas

Using a Remote Commander

You can operate this VCR using a Remote Commander supplied with a Sony product. Set COMMANDER in the menu system according to the remote control code of the Sony product.

Code	Sony product
VTR 1	Betamax VCR
VTR 2	8mm video camera recorder Digital video camera recorder 8mm VCR
VTR 3	VHS VCR
VTR 4	Digital VCR Digital video camera recorder
VTR 5 and 6	–

Notes on recording mode
This VCR plays back and records in SP (standard play) mode and in LP (long play) mode. The VCR automatically plays back the tape in the recorded mode. The playback quality in LP mode, however, will not be as good as that in SP mode. When recording, select SP or LP in the menu system.

Note on the beep sound
A beep sounds when you turn the power on. Several beeps also sound as a warning of any unusual condition of the VCR.
Note that the beep sound is not recorded on the tape. If you do not want to hear the beep sound, select OFF in the menu system.

Cautions on the LCD panel
- Do not push nor touch the LCD when moving the LCD panel.
- Do not pick up the VCR by the LCD panel.
- Do not place the VCR so as to point the LCD screen toward the sun. The LCD panel may be damaged. Be careful when placing the VCR under sunlight or by a window.

Uso de un control remoto

Es posible emplear esta videograbadora con un control remoto suministrado con un producto Sony.
Ajuste COMMANDER en el sistema de menús según el código de control remoto del producto Sony.

Código	Producto Sony
VTR 1	Videograbadora Betamax
VTR 2	Videocámara de 8mm Videocámara digital Videograbadora de 8mm
VTR 3	Videograbadora VHS
VTR 4	Videograbadora digital Videocámara digital
VTR 5 y 6	–

Notas sobre el modo de grabación
Esta videograbadora reproduce y graba en los modos SP (reproducción estándar) y LP (reproducción de larga duración). La videograbadora reproduce la cinta automáticamente en el modo grabado. No obstante, la calidad de reproducción en el modo LP no será tan buena como en el modo SP. Al grabar, seleccione SP o LP en el sistema de menús.

Nota sobre los pitidos
Se oye un pitido al activar la alimentación. También emite varios pitidos como aviso de alguna condición inusual de la videograbadora. Observe que los pitidos no se graban en la cinta. Si no desea oír los pitidos, seleccione OFF en el sistema de menús.

Precauciones sobre el panel LCD
- No presione ni toque la pantalla LCD al mover el panel LCD.
- No agarre la videograbadora por el panel LCD.
- Coloque la videograbadora de forma que la pantalla LCD no quede orientada hacia el sol, ya que el panel LCD podría dañarse. Tenga cuidado al colocar la videograbadora bajo la luz solar o en una ventana.

Playing back a tape

Reproducción de cintas

Various playback modes

Distintos modos de reproducción

To view a still picture (playback pause)
Press ❚❚ during playback. The PAUSE lamp (orange) lights up. To resume playback, press ❚❚ or ▷.

To locate a scene (picture search)
Keep pressing ◀◀ or ▶▶ during playback. To resume normal playback, release the button.

To monitor the high-speed picture while advancing the tape or rewinding (skip scan)
Keep pressing ◀◀ while rewinding or ▶▶ while advancing the tape. To resume normal rewinding or fast-forward, release the button.

To view the picture at 1/3 speed (slow playback)
Press ❚► during playback. To resume normal playback, press ▷.

Notes on playback
- The sound is muted in the various playback modes.
- When playback pause mode lasts for 5 minutes, the VCR automatically enters stop mode. To resume playback press ▷.

Para ver imágenes fijas (pausa de reproducción)
Presione ❚❚ durante la reproducción. El indicador PAUSE (naranja) se ilumina. Para reanudar la reproducción, presione ❚❚ o ▷.

Para localizar escenas (búsqueda de imágenes)
Mantenga presionado ◀◀ o ▶▶ durante la reproducción. Para reanudar la reproducción normal, suelte el botón.

Para controlar la imagen a alta velocidad mientras la cinta avanza rápidamente o se rebobina (exploración con omisión)
Mantenga presionado ◀◀ durante el rebobinado o ▶▶ durante el avance rápido de la cinta. Para reanudar el rebobinado o avance rápido normal, suelte el botón.

Para ver la imagen a una velocidad de 1/3 (reproducción a cámara lenta)
Presione ❚► durante la reproducción. Para reanudar la reproducción normal, presione ▷.

Notas sobre la reproducción
- El sonido se cancela en los distintos modos de reproducción.
- Si el modo de pausa de reproducción dura 5 minutos, la videograbadora entra automáticamente en el modo de parada. Para reanudar la reproducción, presione ▷.

Playing back a dual soundtrack tape

When you play back a dual soundtrack tape, select the desired sound in the menu.

(1) Press MENU to display the menu.
(2) Turn the control dial to select HiFi SOUND, then press the control dial.
(3) Turn the control dial to select desired sound, then press the control dial.
Normally select STEREO. You can hear stereo sound or sound 1 and 2 in case of dual soundtrack tape.
To listen to left channel or sound 1, select 1.
To listen to right channel or sound 2, select 2.
(4) Press MENU to erase the menu display.

Reproducción de cintas de pista de sonido dual

Al reproducir una cinta de pista de sonido dual, seleccione el sonido que desee en el menú.

(1) Presione MENU para que aparezca el menú.
(2) Gire el dial de control para seleccionar HiFi SOUND y, a continuación, presione dicho dial.
(3) Gire el dial de control para seleccionar el sonido que desee y, a continuación, presione dicho dial.
Normalmente seleccione STEREO. Es posible escuchar el sonido estéreo o el sonido 1 y 2 en el caso de cintas de pistas de sonido dual.
Para escuchar el canal izquierdo o el sonido 1, seleccione 1.
Para escuchar el canal derecho o el sonido 2, seleccione 2.
(4) Presione MENU para que desaparezca el menú.

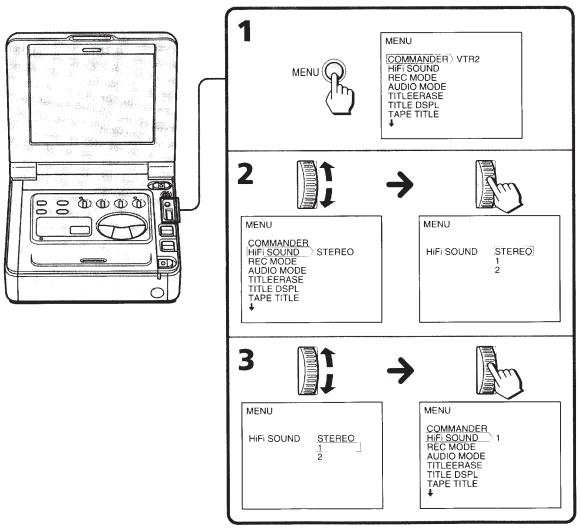

Using alternative power sources

Uso de fuentes de alimentación alternativas

You can choose any of the following power sources for your VCR: battery pack, house current, and 12/24 V car battery. Choose the appropriate power source depending on where you want to use your VCR.

Place	Power source	Accessory to be used
Indoors	House current	Supplied AC adaptor/charger
Outdoors	Battery pack	Battery pack NP-F730, NP-730H, NP-F750, NP-F930, NP-F950
In the car	12 V or 24 V car battery	Sony DC adaptor/charger DC-V700

Note on power sources
Disconnecting the power source or removing the battery pack during recording or playback may damage the inserted tape. If this happens, restore the power supply again immediately.

Es posible elegir cualquiera de las siguientes fuentes de alimentación para la videograbadora: paquete de batería, corriente doméstica y batería de automóvil de 12/24 V. Elija la fuente adecuada en función del lugar donde desee emplear la videograbadora.

Lugar	Fuente de alimentación	Accesorio necesario
Interiores	Corriente doméstica	Cargador/adaptador de CA suministrado
Exteriores	Paquete de batería	Paquete de batería NP-F730, NP-730H NP-F750, NP-F930, NP-F950
Automóvil	Batería de automóvil de 12V o 24V	Cargador/adaptador de CC Sony DC-V700

Nota sobre las fuentes de alimentación
Si desconecta la fuente de alimentación o extrae el paquete de batería durante la grabación o la reproducción, puede dañar la cinta insertada. Si esto ocurre, vuelva a conectar el suministro de alimentación inmediatamente.

Using the battery pack

This VCR operates with the "InfoLITHIUM" battery pack (not supplied). If you use any other battery pack to operate your VCR, the VCR may not operate or the battery life may be shortened.

"InfoLITHIUM" is a trademark of Sony Corporation.

Charging the battery pack

(1) Set the mode change switch to CHARGE.
(2) Connect the mains lead to mains. The beep sounds and the display window lights up.
(3) Install the battery pack. Charging begins.
When the remaining battery indicator becomes and the CHARGE lamp lights up, normal charge is completed. For a full charge, which allows you to use the battery slightly longer than "normal charge," leave the battery pack attached until the CHARGE lamp goes out and the remaining battery indicator becomes .
(4) Remove the battery pack. The battery pack can be used even if the charging is not completed.

Remaining battery indicator

Normal charge	Full charge
	FULL

Uso del paquete de batería

Esta videograbadora funciona con el paquete de batería "InfoLITHIUM" (no suministrado). Si utiliza otro tipo de paquete para emplear la videograbadora, es posible que ésta no funcione o que la duración de la batería se reduzca.

"InfoLITHIUM" es una marca comercial de Sony Corporation.

Carga del paquete de batería

(1) Ajuste el interruptor de modo en CHARGE.
(2) Conecte el cable de alimentación a la toma de corriente. La unidad emite un pitido y el visor se ilumina.
(3) Instale el paquete de batería. Se inicia la carga.
Cuando el indicador de batería restante muestre y el indicador CHARGE se ilumine, significa que la carga normal ha finalizado. Para obtener una carga completa, que permite utilizar el paquete durante un espacio de tiempo ligeramente superior que la "carga normal", deje dicho paquete fijado hasta que el indicador CHARGE se apague y el indicador de batería restante aparezca como .
(4) Extraiga el paquete de batería. Éste puede utilizarse aunque la carga no haya finalizado.

Indicador de batería restante

Carga normal	Carga completa
	FULL

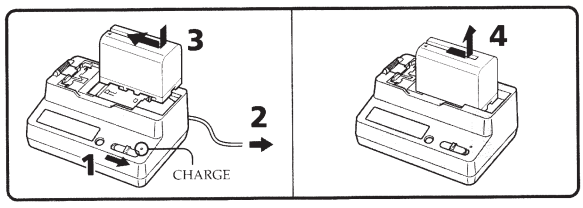

Charging time

Battery pack	Charging time *
NP-F730	250 (190)
NP-F730H/F750	270 (210)
NP-F930	330 (270)
NP-F950	360 (300)

Numbers in parentheses indicate the time for a normal charge. (**Normal charge**)
* Approximate number of minutes to charge an empty battery pack fully using the supplied AC charger. (**Full charge**) (Lower temperatures require a longer charging time.)

Battery life

Battery pack	Playback time
NP-F730	100 (90)
NP-F730H/F750	115 (105)
NP-F930	160 (135)
NP-F950	185 (165)

Numbers in parentheses indicate the time when you use a normal charged battery pack.

Note on remaining battery time indication
Remaining battery time is displayed on the LCD screen. It may not be displayed properly, however, depending on the conditions and circumstances of use.

Notes on charging the battery pack
- When the mode change switch is set to VTR/CAMERA during charging, charging stops.
- If the CHARGE lamp does not light or flash, check that the battery pack is correctly attached to the AC adaptor/charger. If it is not attached, it will not be charged.
- You cannot charge the battery pack while operating the VCR using the AC adaptor/charger.
- When a fully charged battery pack is installed, the CHARGE lamp will light once, then go out.

Tiempo de carga

Paquete de batería	Tiempo de carga *
NP-F730	250 (190)
NP-F730H/F750	270 (210)
NP-F930	330 (270)
NP-F950	360 (300)

Los números entre paréntesis indican el tiempo de una carga normal **(carga normal)**.
* Número aproximado de minutos para cargar completamente un paquete de batería descargado mediante el cargador de CA suministrado **(carga completa)**. (Las temperaturas bajas requieren un tiempo de carga mayor.)

Duración de la batería

Paquete de batería	Tiempo de reproducción
NP-F730	100 (90)
NP-F730H/F750	115 (105)
NP-F930	160 (135)
NP-F950	185 (165)

Los números entre paréntesis indican el tiempo al emplear un paquete de batería con carga normal.

Nota sobre la indicación de tiempo de batería restante
El tiempo de batería restante aparece en la pantalla LCD. No obstante, es posible que no aparezca correctamente en función de las condiciones y circunstancias de uso.

Notas sobre la carga del paquete de batería
- Si el interruptor de modo se ajusta en VTR/CAMERA durante la carga, ésta se interrumpirá.
- Si el indicador CHARGE no se ilumina o parpadea, compruebe que el paquete de batería se encuentra correctamente fijado al cargador/adaptador de CA. Si no lo está, no se cargará.
- No es posible cargar el paquete de batería mientras emplea la videograbadora con el cargador/adaptador de CA.
- Al instalar un paquete de batería completamente cargado, el indicador CHARGE se iluminará una vez y, a continuación, se apagará.

Using alternative power sources

Install the battery pack on the VCR

While pressing the battery pack, slide it to the left so that it attaches to the battery mounting surface firmly.

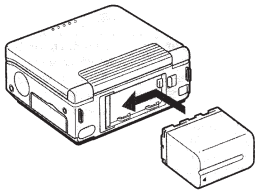

Note on the battery pack

Do not carry the VCR by grasping the battery pack.

To remove the battery pack

While pressing BATT, slide the battery pack to the right.

Using a car battery

Use the DC adaptor/charger Sony DC-V700 (not supplied). Connect the car battery cord to the cigarette lighter socket of a car (12 V or 24 V). Connect the DC adaptor/charger and the VCR using the supplied DK-415 connecting cord.

This mark indicates that this product is a genuine accessory for Sony video product.
When purchasing Sony video products, Sony recommends that you purchase accessories with this "GENUINE VIDEO ACCESSORIES" mark.

Uso de fuentes de alimentación alternativas

Instale el paquete de batería en la videograbadora

Mientras presiona el paquete, deslícelo a la izquierda de forma que quede firmemente fijado en la superficie de montaje de la batería.

Nota sobre el paquete de batería

No transporte la videograbadora agarrando el paquete de batería.

Para extraer el paquete de batería

Deslícelo a la derecha mientras presiona BATT.

Uso de una batería de automóvil

Emplee el cargador/adaptador de CC DC-V700 de Sony (no suministrado). Conecte el cable de batería de automóvil a la clavija del encendedor del automóvil (12 V o 24 V). Conecte el cargador/adaptador de CC y la videograbadora con el cable de conexión DK-415 suministrado.

Esta marca indica que este producto es un accesorio genuino para productos de video Sony.
Al adquirir productos de video Sony, Sony recomienda que los accesorios presenten la marca "GENUINE VIDEO ACCESSORIES".

Changing the mode settings

You can change the mode settings in the menu system to further enjoy the features and functions of the VCR.

(1) Press MENU to display the menu.
(2) Turn the control dial to select the desired item, then press the control dial. Only the selected item is displayed.
(3) Turn the control dial to select the desired mode, then press the control dial. If you want to change the other modes, repeat steps 2 and 3.
(4) Press MENU to erase the menu display.

Cambio de los ajustes de modo

Es posible cambiar los ajustes de modo en el sistema de menús para disfrutar en mayor medida de las funciones y características de la videograbadora.

(1) Presione MENU para que aparezca el menú.
(2) Gire el dial de control para seleccionar el elemento que desee y, a continuación, presione dicho dial. Sólo aparece el elemento seleccionado.
(3) Gire el dial de control para seleccionar el modo que desee y, a continuación, presione dicho dial. Si desea cambiar los otros modos, repita los pasos 2 y 3.
(4) Presione MENU para que desaparezca el menú.

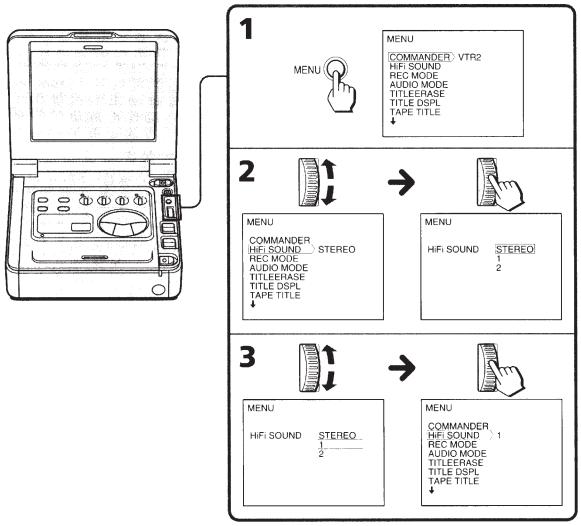

Changing the mode settings

Selecting the mode setting of each item

COMMANDER <VTR1-6/OFF>
- Select VTR2 when using a Remote Commander supplied with Sony video camera recorder.
- Select VTR1 - 6 when using a Remote Commander supplied with Sony product.
- Select OFF when not using a Remote Commander or to prevent the unit from being operated by other Remote Commanders.

HiFi SOUND <STEREO/1/2>
- Normally select STEREO.
- Select 1 or 2 to play back a dual soundtrack tape.

REC MODE* <SP/LP>
- Select SP when recording in SP (standard play) mode.
- Select LP when recording in LP (long play) mode. You can record for 1.5 times longer than SP mode.

Note on LP mode

It is recommended that the tape recorded on this VCR in LP mode is played back on this VCR. If you play back the tape on other VCR, the sound and picture may be distorted.
If you play back a tape, which was recorded on other VCR in LP mode, on this VCR, the sound and picture may also be distorted.

AUDIO MODE <12BIT/16BIT>
- Normally select 12BIT to record two stereo sound.
- Select 16BIT to record the one stereo sound with high quality.

TITLEERASE

Erase the title you have superimposed.

TITLE DSPL <ON/OFF>
- Select ON to display the title you have superimposed.
- Select OFF not to display the title.

TAPE TITLE

Select this item to label the cassette tape.

Cambio de los ajustes de modo

Selección del ajuste de modo de cada elemento

COMMANDER <VTR1-6/OFF>
- Seleccione VTR2 cuando utilice un control remoto suministrado con una videocámara Sony.
- Seleccione VTR1 - 6 cuando utilice un control remoto suministrado con un producto Sony.
- Seleccione OFF cuando no utilice control remoto o para evitar el empleo de la unidad mediante otros controles remotos.

HiFi SOUND <STEREO/1/2>
- Normalmente seleccione STEREO.
- Seleccione 1 o 2 para reproducir cintas de pista de sonido dual.

REC MODE* <SP/LP>
- Seleccione SP cuando grabe en el modo SP (reproducción estándar).
- Seleccione LP cuando grabe en el modo LP (reproducción de larga duración). Podrá grabar 1,5 veces más que en el modo SP.

Nota sobre el modo LP

Se recomienda reproducir en esta videograbadora las cintas grabadas en la misma en el modo LP. Si reproduce la cinta en otra videograbadora, es posible que la imagen y el sonido se distorsionen.
Si reproduce en esta videograbadora una cinta grabada en otra videograbadora en el modo LP, es posible que la imagen y el sonido se distorsionen también.

AUDIO MODE <12BIT/16BIT>
- Normalmente seleccione 12BIT para grabar el sonido estéreo dos.
- Seleccione 16BIT para grabar el sonido estéreo uno con alta calidad.

TITLEERASE

Borra el título superpuesto.

TITLE DSPL <ON/OFF>
- Seleccione ON para mostrar el título que haya superpuesto.
- Seleccione OFF si no desea mostrar el título.

TAPE TITLE

Seleccione este elemento para etiquetar cintas de cassette.

Changing the mode settings

BEEP* <ON/OFF>
- Select ON so that beeps sound when you turn the power on, etc.
- Select OFF when you do not want to hear the beep sound.

AUDIO MIX*

Select this item and adjust the balance between the stereo 1 and stereo 2 by turning the control dial.

CM SEARCH <ON/OFF>
- Select ON to search using cassette memory.
- Select OFF to search without using cassette memory.

DATA CODE <DATE/CAM or DATE>
- Select DATE/CAM to display date and recording data during playback.
- Select DATE to display date during playback.

LCD COLOR*

Select this item and change the level of the indicator by turning the control dial to adjust the color intensity of the picture.

LCD HUE*

Select this item and change the level of the indicator by turning the control dial to adjust the hue of the picture.

DISPLAY* <LCD or V-OUT/LCD>
- Normally select LCD.
- Select V-OUT/LCD to display indicator both on the LCD screen and the TV screen.

Note on DISPLAY setting

If you press the DISPLAY button with DISPLAY set to V-OUT/LCD, you cannot input an external signal.

AUTO TV ON* <OFF/ON>

You can use this feature only with Sony TVs.
- Select ON to turn on the TV automatically when using the LASER LINK function.
- Select OFF not to turn on the TV.

Cambio de los ajustes de modo

BEEP* <ON/OFF>
- Seleccione ON para que la unidad emita pitidos al activar la alimentación, etc.
- Seleccione OFF si no desea oír los pitidos.

AUDIO MIX*

Seleccione este elemento y ajuste el balance entre el estéreo 1 y el estéreo 2 girando el dial de control.

CM SEARCH <ON/OFF>
- Seleccione ON para realizar búsquedas utilizando la memoria en cassette.
- Seleccione OFF para realizar búsquedas sin utilizar la memoria en cassette.

DATA CODE <DATE/CAM o DATE>
- Seleccione DATE/CAM para mostrar la fecha y los datos de grabación durante la reproducción.
- Seleccione DATE para mostrar la fecha durante la reproducción.

LCD COLOR*

Seleccione este elemento y cambie el nivel del indicador girando el dial de control para ajustar la intensidad de color de la imagen.

LCD HUE*

Seleccione este elemento y cambie el nivel del indicador girando el dial de control para ajustar la tonalidad de la imagen.

DISPLAY* <LCD o V-OUT/LCD>
- Normalmente seleccione LCD.
- Seleccione V-OUT/LCD para que los indicadores aparezcan en la pantalla LCD y en la del TV.

Nota sobre el ajuste DISPLAY

Si presiona el botón DISPLAY con DISPLAY ajustado en V-OUT/LCD, no podrá introducir señales externas.

AUTO TV ON* <OFF/ON>

Sólo es posible utilizar esta función con televisores Sony.
- Seleccione ON para encender el TV automáticamente al utilizar la función LASER LINK.
- Seleccione OFF si no desea que el TV se encienda.

Changing the mode settings

TV INPUT* <VIDEO1/VIDEO2/VIDEO3/OFF>
Select 1 or 2 or 3 of the video input on the TV which the IR receiver (not supplied) is connected to when using the LASER LINK function.

CLOCK SET
Select this item to reset the date or time.

* These settings are retained even when the battery is removed, as long as the vanadium-lithium battery is charged. As far as the items without an asterisk are concerned, these settings return to the default 5 minutes or more after the battery is removed.

Notes
- When playing back a tape recorded in the 16-bit mode, you cannot adjust the balance in AUDIO MIX.
- If you select 16BIT in AUDIO MODE menu, you cannot add an audio sound.

Cambio de los ajustes de modo

TV INPUT* <VIDEO1/VIDEO2/VIDEO3/OFF>
Seleccione 1 o 2 o 3 de la entrada de video del TV en la que esté conectado el receptor IR (no suministrado) al utilizar la función LASER LINK.

CLOCK SET
Seleccione este elemento para reajustar la fecha o la hora.

* Estos ajustes se conservan aunque extraiga el paquete de batería, mientras la pila de vanadio-litio esté cargada. En cuanto a los elementos sin asterisco, sus ajustes recuperan los valores de fábrica 5 minutos o más después de extraer el paquete de batería.

Notas
- Al reproducir una cinta grabada en el modo de 16 bits, no es posible ajustar el balance en AUDIO MIX.
- Si selecciona 16BIT en el menú AUDIO MODE, no será posible añadir sonidos.

Searching a scene

Using the Remote Commander supplied with a Sony digital video camera recorder, you can search a scene with a date or title. You can also search a photo (still picture) recorded by the Sony digital video camera recorder. Refer to the operating instructions of the digital camera recorder for details.

Searching the boundaries of recorded tape with date - date search

You can search for the boundaries of recorded tape with date - Date Search function. To search the beginning of the specific date and play back from the point, there are two ways:
- Using cassette memory, you can select the date displayed.
- Without using cassette memory.

Searching for the date by using cassette memory

You can use this function only when playing back a tape with cassette memory.

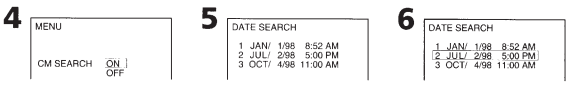

(1) Set the POWER switch to ON.
(2) Press MENU to display the menu.
(3) Turn the control dial to select the CM SEARCH, then press the control dial.
(4) Turn the control dial to select ON, then press the control dial.
(5) Press SEARCH MODE on the Remote Commander repeatedly, until the date search indicator appears.
(6) Press ⏮ or ⏭ to select the date for playback.
Playback starts from the beginning of the selected date automatically.

To stop searching
Press □.

Búsqueda de escenas

Es posible buscar escenas con fecha o título mediante el control remoto suministrado con una videocámara digital Sony. También es posible buscar fotografías (imágenes fijas) grabadas con una videocámara digital Sony. Consulte el manual de instrucciones de ésta para obtener más información.

Búsqueda de los límites de una cinta grabada con fecha - búsqueda de fechas

Es posible buscar los límites de la cinta grabada mediante fecha (Función de búsqueda de fechas). Existen dos métodos para buscar el principio de una fecha específica y reproducir a partir de ese punto:
- Mediante la memoria en cassette, es posible seleccionar la fecha mostrada.
- Sin utilizar la memoria en cassette.

Búsqueda de la fecha mediante la memoria en cassette

Es posible utilizar esta función sólo al reproducir cintas con memoria en cassette.

(1) Ajuste el interruptor POWER en ON.
(2) Presione MENU para que aparezca el menú.
(3) Gire el dial de control para seleccionar CM SEARCH y, a continuación, presione dicho dial.
(4) Gire el dial de control para seleccionar ON y, a continuación, presione dicho dial.
(5) Presione SEARCH MODE varias veces en el control remoto hasta que aparezca el indicador de búsqueda de fechas.
(6) Presione ⏮ o ⏭ y seleccione la fecha para la reproducción.
La reproducción se inicia automáticamente desde el principio de la fecha seleccionada.

Para detener la búsqueda
Presione □.

Searching a scene

Notes
- The interval of the boundaries between the dates needs more than two minutes. The VCR may not search if the beginning of the recorded date is too close to the next one.
- The short cursor on the screen suggests the date selected in the previous time.
- If there is a blank portion in the recorded portion, the Date Search may not function correctly.

Searching for the date without using cassette memory

You can use this function whether the tape has cassette memory or not.

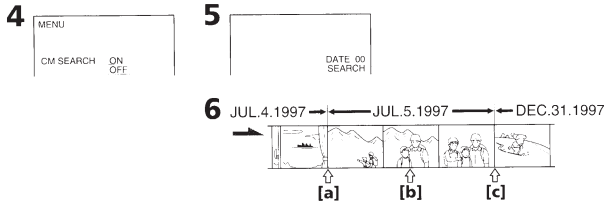

(1) Set the POWER switch to ON.
(2) Press MENU to display the menu.
(3) Turn the control dial to select the CM SEARCH, then press the control dial.
(4) Turn the control dial to select OFF, then press the control dial.
(5) Press SEARCH MODE on the Remote Commander repeatedly, until the date search indicator appears.
(6) When the current position is **[b]**, press ⏮ to search towards **[a]** or press ⏭ to search towards **[c]**. Each time you press ⏮ or ⏭, the VCR searches for the previous or next date.
Playback starts automatically when date changed.

To stop searching
Press □.

Búsqueda de escenas

Notas
- Es necesario que el intervalo de los límites entre las fechas sea superior a dos minutos. Es posible que la videograbadora no realice la búsqueda si el principio de la fecha registrada se encuentra demasiado cerca de la siguiente.
- El cursor corto de la pantalla sugiere la fecha seleccionada anteriormente.
- Si hay un espacio en blanco en la parte grabada, es posible que la búsqueda de fechas no funcione correctamente.

Búsqueda de la fecha sin utilizar la memoria en cassette

Es posible utilizar esta función tanto si la cinta dispone de memoria en cassette como si no.

(1) Ajuste el interruptor POWER en ON.
(2) Presione MENU para que aparezca el menú.
(3) Gire el dial de control para seleccionar CM SEARCH y, a continuación, presione dicho dial.
(4) Gire el dial de control para seleccionar OFF y, a continuación, presione dicho dial.
(5) Presione SEARCH MODE varias veces en el control remoto hasta que aparezca el indicador de búsqueda de fechas.
(6) Si la posición actual es **[b]**, presione ⏮ para buscar hacia **[a]** o ⏭ para buscar hacia **[c]**. Cada vez que presione ⏮ o ⏭, la videograbadora buscará la fecha anterior o la siguiente.
La reproducción se inicia automáticamente al cambiar la fecha.

Para detener la búsqueda
Presione □.

Searching a scene

Searching the boundaries of recorded tape with title - title search

You can search for the boundaries of recorded tape with title - Title Search function.
You can use this function only when playing back a tape with cassette memory.

(1) Set the POWER switch to ON.
(2) Press MENU to display the menu.
(3) Turn the control dial to select the CM SEARCH, then press the control dial.
(4) Turn the control dial to select ON, then press the control dial.
(5) Press SEARCH MODE on the Remote Commander repeatedly, until the title search indicator appears.
(6) Press ⏮ or ⏭ to select the title for playback.
Playback starts from the scene of the selected title automatically.

To stop searching
Press □.

Notes
- You cannot superimpose or search a title, if you use a cassette tape without cassette memory.
- The VCR may not search, if there is a blank portion between the recorded portions in the tape.

Búsqueda de escenas

Búsqueda de los límites de una cinta grabada con título - búsqueda de títulos

Es posible buscar los límites de la cinta grabada mediante el título (Función de búsqueda de títulos).
Es posible utilizar esta función sólo al reproducir cintas con memoria en cassette.

(1) Ajuste el interruptor POWER en ON.
(2) Presione MENU para que aparezca el menú.
(3) Gire el dial de control para seleccionar CM SEARCH y, a continuación presione dicho dial.
(4) Gire el dial de control para seleccionar ON y, a continuación, presione dicho dial.
(5) Presione SEARCH MODE varias veces en el control remoto hasta que aparezca el indicador de búsqueda de títulos.
(6) Presione ⏮ o ⏭ y seleccione el título para la reproducción.
La reproducción se inicia automáticamente a partir de la escena del título seleccionado.

Para detener la búsqueda
Presione □.

Notas
- No es posible superponer ni buscar títulos si emplea una cinta sin memoria en cassette.
- Es posible que la videograbadora no realice la búsqueda si hay un espacio en blanco entre las partes grabadas de la cinta.

Searching for a photo - photo search/photo scan

You can search for the recorded still picture - Photo Search function. There are two modes in Photo Search:
- Using cassette memory, you can select the recorded date displayed.
- Without using cassette memory.

You can also search for still pictures one after another and display each picture for five seconds automatically - Photo Scan function. Even if your tape has no cassette memory, you can use the Photo Scan function.

Searching for a photo by using cassette memory - photo search

You can use this function only when playing back a tape with cassette memory.

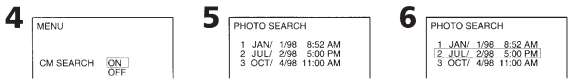

(1) Set the POWER switch to ON.
(2) Press MENU to display the menu.
(3) Turn the control dial to select the CM SEARCH, then press the control dial.
(4) Turn the control dial to select ON, then press the control dial.
(5) Press SEARCH MODE on the Remote Commander repeatedly, until the photo search indicator appears.
(6) Press ⏮ or ⏭ to select the date for playback.
Playback starts from the photo of the selected date automatically.

To stop searching
Press □.

Note
If there is a blank portion in the recorded portion, the Photo Search may not function correctly.

Búsqueda de fotografías - búsqueda/exploración de fotografías

Es posible buscar la imagen fija grabada (Función de búsqueda de fotografías). Existen dos modos en la búsqueda de fotografías:
- Con la memoria en cassette, es posible seleccionar la fecha registrada que aparece.
- Sin utilizar la memoria en cassette.

También es posible buscar imágenes fijas una tras otra y mostrar cada imagen durante cinco segundos automáticamente (Función de exploración de fotografías). Es posible emplear esta función aunque la cinta no disponga de memoria en cassette.

Búsqueda de fotografías mediante la memoria en cassette - búsqueda de fotografías

Es posible utilizar esta función sólo al reproducir cintas con memoria en cassette.

(1) Ajuste el interruptor POWER en ON.
(2) Presione MENU para que aparezca el menú.
(3) Gire el dial de control para seleccionar CM SEARCH y, a continuación, presione dicho dial.
(4) Gire el dial de control para seleccionar ON y, a continuación, presione dicho dial.
(5) Presione SEARCH MODE varias veces en el control remoto hasta que aparezca el indicador de búsqueda de fotografías.
(6) Presione ⏮ o ⏭ y seleccione la fecha para la reproducción.
La reproducción se inicia automáticamente a partir de la fotografía de la fecha seleccionada.

Para detener la búsqueda
Presione □.

Nota
Si hay un espacio en blanco en la parte grabada, es posible que la búsqueda de fotografías no funcione correctamente.

Searching for a photo without using cassette memory - photo search

You can use this function whether the tape has cassette memory or not.

(1) Set the POWER switch to ON.
(2) Press MENU to display the menu.
(3) Turn the control dial to select the CM SEARCH, then press the control dial.
(4) Turn the control dial to select OFF, then press the control dial.
(5) Press SEARCH MODE on the Remote Commander repeatedly, until the photo search indicator appears.
(6) Press ⏮ or ⏭ to select the photo for playback. Each time you press ⏮ or ⏭, the VCR searches for the previous or next scene.
Playback starts from the photo automatically.

To stop searching
Press □.

Búsqueda de fotografías sin utilizar la memoria en cassette - búsqueda de fotografías

Es posible utilizar esta función tanto si la cinta dispone de memoria en cassette como si no.

(1) Ajuste el interruptor POWER en ON.
(2) Presione MENU para que aparezca el menú.
(3) Gire el dial de control para seleccionar CM SEARCH y, a continuación, presione dicho dial.
(4) Gire el dial de control para seleccionar OFF y, a continuación, presione dicho dial.
(5) Presione SEARCH MODE varias veces en el control remoto hasta que aparezca el indicador de búsqueda de fotografías.
(6) Presione ⏮ o ⏭ y seleccione la fotografía para la reproducción. Cada vez que presione ⏮ o ⏭, la videograbadora buscará la escena anterior o la siguiente.
La reproducción se inicia automáticamente a partir de la fotografía.

Para detener la búsqueda
Presione □.

Scanning photo - photo scan

You can use this function whether the tape has cassette memory or not.

Exploración de fotografías

Es posible utilizar esta función tanto si la cinta dispone de memoria en cassette como si no.

(1) Set the POWER switch to ON.
(2) Press SEARCH MODE on the Remote Commander repeatedly until the photo scan indicator appears.
(3) Press ⏮ or ⏭.
Each photos are displayed for about 5 seconds automatically.

To stop searching
Press □.

(1) Ajuste el interruptor POWER en ON.
(2) Presione SEARCH MODE varias veces en el control remoto hasta que aparezca el indicador de exploración de fotografías.
(3) Presione ⏮ o ⏭.
Cada fotografía aparece durante unos 5 segundos automáticamente.

Para detener la búsqueda
Presione □.

Using the Remote Commander supplied with a Sony digital video camera recorder, you can display recording data (date/time or various settings when recorded) on the LCD screen during playback (Data Code). The Data Code is also displayed on the TV.

Press DATA CODE of the Remote Commander during playback.

Mediante el uso del control remoto suministrado con una videocámara digital Sony, puede mostrar datos de grabación (fecha/hora o diversos ajustes de grabación) en la pantalla LCD durante la reproducción (código de datos). El código de datos también aparece en el TV.

Presione DATA CODE en el control remoto durante la reproducción.

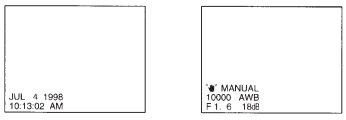

To select the items to be displayed

Set DATA CODE in the menu system, and select the following items:
When DATE/CAM is selected: date → various settings (steady shot, AE mode, shutter speed, white balance, aperture value, gain) → no indicator.
When DATE is selected: date → no indicator.

When bars (--:--:--) appear
- A blank portion of the tape is being played back.
- The tape was recorded by a camcorder without having date and time set.
- The tape is unreadable due to tape damage or noise.

Para seleccionar los elementos de visualización

Ajuste DATA CODE en el sistema de menús y seleccione los siguientes elementos:
Si selecciona DATE/CAM: fecha → distintos ajustes (estabilización de imagen, modo AE, velocidad de obturación, balance de blancos, valor de apertura, ganancia) → ningún indicador.
Si selecciona DATE: fecha → ningún indicador.

Si aparecen barras (--:--:--)
- Se está reproduciendo un espacio en blanco de la cinta.
- La cinta se ha grabado en una videocámara en la que no se ha ajustado la fecha ni la hora.
- La cinta no es legible debido a daños o ruido en la misma.

Watching on a TV screen / Visualización de la imagen en la pantalla de un TV

Connect this VCR to another VCR or TV to watch the playback picture on the TV screen.

Connecting directly to a VCR/TV

Open the jack cover. Connect this VCR to the LINE IN inputs on the TV or VCR connected to the TV, using the supplied A/V connecting cable. Set the TV/VCR selector on the TV to VCR. When connecting to the VCR, set the input selector on the VCR to LINE.
If your VCR or TV has an S video jack, connect using the supplied S video cable **[a]** to obtain a high quality picture. If you are going to connect the VCR using the S video cable **[a]**, you do not need to connect the yellow (video) plug of the A/V connecting cable **[b]**.
Procedure to play back is the same as when playing back on the LCD screen. Turn down the volume of this VCR.

Conecte esta videograbadora a otra videograbadora o al TV para ver la imagen de reproducción en la pantalla del TV.

Conexión directa a una videograbadora/TV

Abra la cubierta de la toma. Conecte esta videograbadora a las entradas LINE IN del TV o de la videograbadora conectada al TV, mediante el cable de conexión de A/V suministrado. Ajuste el selector TV/VCR del TV en VCR. Si realiza la conexión a la videograbadora, ajuste el selector de entrada de ésta en LINE.
Si la videograbadora o el TV dispone de una toma de video S, realice la conexión mediante el cable de video S suministrado **[a]** para obtener imágenes de alta calidad. Si va a conectar la videograbadora mediante el cable de video S **[a]**, no es preciso conectar el enchufe amarillo (video) del cable de conexión de A/V **[b]**.
El procedimiento de reproducción es el mismo que para reproducir en la pantalla LCD.
Disminuya el volumen de esta videograbadora.

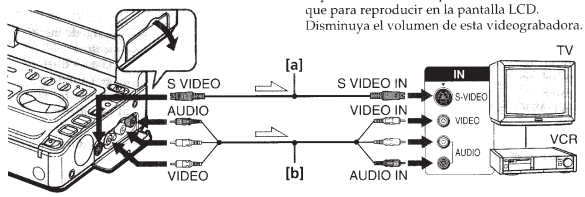

: Signal flow / Flujo de señales

When connecting the A/V connecting cable
Connect the plugs to the jacks in the same colors on this VCR and the TV or the other VCR.

If the VCR or TV is a monaural type
Connect the yellow plug of the A/V connecting cable to the video input jack and the white or the red plug to the audio input jack on the VCR or the TV. With this connection, the sound is monaural even in stereo mode.

To display indicators on the TV
Set DISPLAY to V-OUT/LCD in the menu and press DISPLAY. To turn off, press DISPLAY again.

Si conecta el cable de conexión de A/V
Conecte los enchufes a las tomas del mismo color en esta videograbadora y en el TV o en la otra videograbadora.

Si la videograbadora o el TV es del tipo monofónico
Conecte el enchufe amarillo del cable de conexión de A/V a la toma de entrada de video y el enchufe blanco o el rojo a la toma de entrada de audio de la videograbadora o del TV. Con esta conexión, el sonido será monofónico incluso en el modo estéreo.

Para ver los indicadores en el TV
Ajuste DISPLAY en V-OUT/LCD en el menú y presione DISPLAY. Para desactivarlos, vuelva a presionar DISPLAY.

If you use a Sony TV
- You can turn on the TV automatically when you press the LASER LINK or ▷ button. To do so, set the AUTO TV ON to ON in the menu system and turn the TV's main switch on, then do either of the following:
- Point the LASER LINK emitter towards the TV's remote sensor and press LASER LINK.
- Turn on the LASER LINK button and press ▷ .
- You can switch the video input of the TV automatically to the one which the AV cordless IR receiver is connected. To do so, set the AUTO TV ON to ON and the TV INPUT to the same video input (1, 2, 3) in the menu system. With some models, however, the picture and sound may be disconnected momentarily when the video input is switched.
- The above features may not work with some TV models.

Note
When LASER LINK is activated (the LASER LINK button is lit), the VCR consumes power. Press and turn off the LASER LINK button when it is not needed.

Si utiliza un TV Sony
- Es posible encenderlo automáticamente al presionar el botón LASER LINK o ▷ . Para ello, ajuste AUTO TV ON en ON en el sistema de menús y active el interruptor principal del TV; a continuación, realice alguna de las siguientes operaciones:
- Oriente el emisor LASER LINK hacia el sensor de control remoto del TV y presione LASER LINK.
- Active el botón LASER LINK y presione ▷ .
- Es posible cambiar automáticamente la entrada de video del TV a la que esté conectada el receptor IR. Para ello, ajuste AUTO TV ON en ON y TV INPUT en la misma entrada de video (1, 2, 3) en el sistema de menús. No obstante, con determinados modelos es posible que la imagen y el sonido se desconecten momentáneamente al cambiar la entrada de video.
- Las características anteriores pueden no funcionar con ciertos modelos de TV.

Nota
Si LASER LINK está activado (el botón LASER LINK está iluminado), la videograbadora consumirá energía. Presione y desactive el botón LASER LINK cuando no sea necesario.

To connect to a TV or VCR without video/audio input jacks
Use the RFU-95UC RFU adaptor (not supplied).

Using the AV cordless IR receiver – LASER LINK

Once you connect the AV cordless IR receiver (not supplied) having the LASER LINK mark to your TV or VCR, you can easily view the picture on your TV. For details, refer to the operating instructions of the AV cordless IR receiver.
LASER LINK is a system which transmits and receives a picture and sound between video equipment having the LASER LINK mark by using infrared rays.
LASER LINK is a trademark of Sony Corporation.

To play back on a TV
(1) After connecting your TV and AV cordless IR receiver, set the POWER switch on the AV cordless IR receiver to ON.
(2) Set the POWER switch on this VCR to ON.
(3) Turn the TV on and set the TV/VCR selector on the TV to VCR.
(4) Press LASER LINK. The lamp of the LASER LINK button lights up.
(5) Press ▷ on this VCR to start playback.
(6) Point the LASER LINK emitter at the AV cordless IR receiver.

Para conectar una videograbadora o un TV sin tomas de entrada de video/audio
Utilice el adaptador RFU RFU-95UC (no suministrado).

Uso del receptor IR de AV inalámbrico – LASER LINK

Si conecta el receptor IR de AV inalámbrico (no suministrado) que presente la marca LASER LINK al TV o videograbadora, podrá ver fácilmente las imágenes en el TV. Para más información, consulte el manual de instrucciones de dicho receptor.
LASER LINK es un sistema que transmite y recibe mediante rayos infrarrojos imágenes y sonido entre equipos de video que presenten la marca LASER LINK.
LASER LINK es una marca comercial de Sony Corporation.

Para realizar la reproducción en un TV
(1) Después de conectar el TV y el receptor IR, ajuste el interruptor POWER de éste en ON.
(2) Ajuste el interruptor POWER de esta videograbadora en ON.
(3) Encienda el TV y ajuste el selector TV/VCR de éste en VCR.
(4) Presione LASER LINK. El indicador del botón LASER LINK se ilumina.
(5) Presione ▷ en esta videograbadora para iniciar la reproducción.
(6) Oriente el emisor LASER LINK hacia el receptor IR.

Editing onto another tape / Edición en otra cinta

You can create your own video program by editing with any other DV, mini DV, Hi8 8 mm, Hi8 Hi8, VHS VHS, S-VHS S-VHS, VHSC VHSC, S-VHSC S-VHSC or ß Betamax VCR that has audio/video inputs. You can edit with little deterioration of picture and sound quality when using the DV cable.

Before editing

Connect the VCRs using the supplied DV cable or the supplied A/V connecting cable.

Using the DV connecting cable
Simply connect the supplied DV cable to DV IN/OUT and to DV IN/OUT of the DV products. With digital-to-digital connection, video and audio signals are transmitted in digital form for high-quality editing.

Puede crear su propio programa de video editando con otra videograbadora DV, mini DV, 8 mm, Hi8 Hi8, VHS VHS, S-VHS S-VHS, VHSC VHSC, S-VHSC S-VHSC o ß Betamax que disponga de entradas de audio/video. Si utiliza el cable DV, podrá editar con un deterioro mínimo de calidad de imagen y sonido.

Antes de editar

Conecte las videograbadoras con el cable DV suministrado o con el de A/V suministrado.

Uso del cable de conexión DV
Basta con conectar el cable DV suministrado a DV IN/OUT y a DV IN/OUT de los productos DV. Con una conexión digital-a-digital, las señales de video y audio se transmiten en formato digital para obtener ediciones de alta calidad.

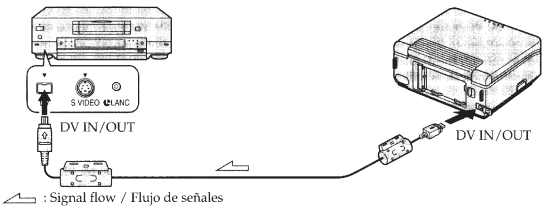

: Signal flow / Flujo de señales

Notes on editing when using the DV cable
- You can connect one VCR only.
- You can record picture, sound and system data at the same time on the DV products by using the DV cable only.
- You cannot edit the titles, display indicator, or the contents of cassette memory.
- If you record playback pause picture with the DV cable, the recorded picture becomes rough. And when you playback the picture using the other video equipment, the picture may jitter.
- You can also use this VCR as a recorder with this connection. In this case "DV IN" indicator appears on the screen.

Notas sobre la edición si se utiliza el cable DV
- Sólo es posible conectar una videograbadora.
- Es posible grabar datos de imagen, sonido y de sistema simultáneamente en los productos DV utilizando el cable DV solamente.
- No es posible editar los títulos, los indicadores de pantalla ni el contenido de la memoria en cassette.
- Si graba imágenes de pausa de reproducción con el cable DV, la imagen grabada aparecerá sin nitidez. Al reproducir la imagen con el otro equipo de video, es posible que la imagen tiemble.
- También es posible utilizar esta videograbadora como grabadora con esta conexión. En este caso, el indicador "DV IN" aparece en la pantalla.

Editing onto another tape — Edición en otra cinta

Using the A/V connecting cable or S video connecting cable

Set the input selector on the VCR to LINE.

Uso del cable de conexión de A/V o de video S

Ajuste el selector de entrada de la videograbadora en LINE.

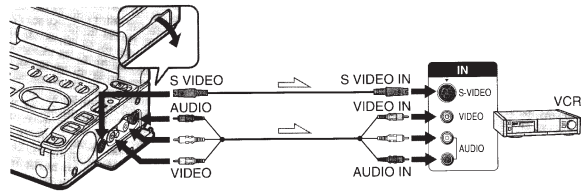

: Signal flow / Flujo de señales

Notes on editing when using the A/V connecting cable

- Press DISPLAY, DATA CODE and SEARCH MODE on the Remote Commander (not supplied) to turn off the display indicators. Otherwise, the indicators will be recorded on the tape.
- If the (recording) VCR is a monaural type, connect the yellow plug of the A/V connecting cable for video to the VCR. Connect only the white or red plug for audio to the VCR. If you connect the white plug, the sound is L (left) signal. If you connect the red plug, the sound is R (right) signal.
- You can edit precisely by connecting both VCRs using a LANC cable if the VCR has fine synchro-editing function, using this VCR as a player.

Notas sobre la edición al utilizar el cable de conexión de A/V

- Presione DISPLAY, DATA CODE y SEARCH MODE en el control remoto (no suministrado) para desactivar los indicadores. En caso contrario, éstos se grabarán en la cinta.
- Si la videograbadora (grabadora) es de tipo monofónico, conecte el enchufe amarillo del cable de conexión de A/V para video a la videograbadora. Conecte sólo el enchufe blanco o el rojo para audio a la videograbadora. Si conecta el enchufe blanco, el sonido será el de la señal izquierda (L). Si conecta el enchufe rojo, el sonido será el de la señal derecha (R).
- Es posible editar con precisión conectando ambas videograbadoras mediante un cable LANC si la videograbadora dispone de la función de edición fina sincronizada, empleando esta videograbadora como reproductor.

Editing onto another tape — Edición en otra cinta

Starting editing

(1) Insert a blank tape (or a tape you want to record over) into the (recording) VCR, and insert your recorded tape into this VCR.
(2) Play back the recorded tape on this VCR until you locate the point where you want to start editing, then press ❚❚ to set this VCR in playback pause mode.
(3) On the (recording) VCR, locate the recording start point and set the VCR in recording pause mode.
(4) Press ❚❚ on both VCRs simultaneously to start editing.

To edit more scenes

Repeat steps 2 to 4.

To stop editing

Press □ on both VCRs.

Inicio de la edición

(1) Inserte una cinta virgen (u otra sobre la que desee grabar) en la videograbadora (grabadora), y la cinta grabada en esta videograbadora.
(2) Reproduzca la cinta grabada en esta videograbadora hasta que localice el punto donde desee iniciar la edición y, a continuación, presione ❚❚ para ajustar esta videograbadora en el modo de pausa de reproducción.
(3) En la videograbadora (grabadora), localice el punto de inicio de la grabación y ajuste la videograbadora en el modo de pausa de grabación.
(4) Presione ❚❚ en ambas videograbadoras simultáneamente para iniciar la edición.

Para editar más escenas

Repita los pasos 2 a 4.

Para detener la edición

Presione □ en ambas videograbadoras.

Recording from a VCR or TV — Grabación desde una videograbadora o TV

You can record a tape from another VCR or a TV program from a TV that has video/audio outputs. Connect this (recording) VCR to the (playback) VCR or TV. Turn down the volume of this VCR while editing. Otherwise, picture distortion may occur.
(1) Set the POWER switch to ON, and set DISPLAY to LCD in the menu system.
(2) Press the two ● REC buttons at the same time, then press ❚❚ to set the VCR to recording pause mode. The REC (red) and PAUSE (orange) lamps light up.
(3) Start playing back a tape on the (playback) VCR or tune in the TV program you want to record. The pictures on the VCR or TV appear on the LCD screen of this VCR.
(4) Press ❚❚ at the point where you want to start recording. The REC lamp remains on and the PAUSE lamp goes off.

S VIDEO and VIDEO/AUDIO jacks automatically work as input jacks.
If the (playback) VCR or TV has an S video jack, connect using the S video cable **[a]** to obtain high quality picture.

Es posible grabar cintas desde otra videograbadora o programas de TV desde un TV que disponga de salidas de video/audio. Conecte esta videograbadora (grabadora) a la otra videograbadora (reproductor) o al TV. Disminuya el volumen de esta videograbadora durante la edición, ya que en caso contrario la imagen puede distorsionarse.
(1) Ajuste el interruptor POWER en ON, y DISPLAY en LCD en el sistema de menús.
(2) Presione simultáneamente los dos botones ● REC y, a continuación, presione ❚❚ para ajustar la videograbadora en el modo de pausa de grabación. Los indicadores REC (rojo) y PAUSE (naranja) se iluminan.
(3) Inicie la reproducción de la cinta de la videograbadora (reproductor) o sintonice el programa de TV que desee grabar. Las imágenes de la videograbadora o del TV aparecen en la pantalla LCD de esta videograbadora.
(4) Presione ❚❚ en el punto donde desee iniciar la grabación. El indicador REC permanece iluminado, mientras que PAUSE se apaga.

Las tomas S VIDEO y VIDEO/AUDIO funcionan automáticamente como tomas de entrada.
Si la videograbadora (reproductor) o el TV dispone de toma de video S, realice la conexión con el cable de video S **[a]** para obtener imágenes de alta calidad.

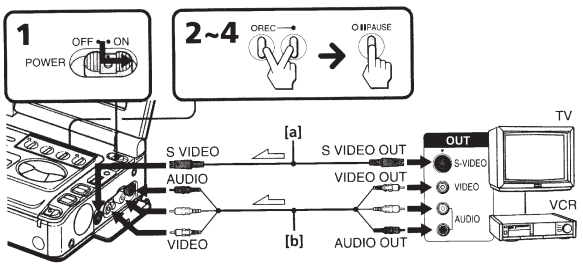

: Signal flow / Flujo de señales

Recording from a VCR or TV — Grabación desde una videograbadora o TV

Notes on connection

- If the (recording) VCR is a monaural type, connect the yellow plug of the A/V connecting cable for video to the VCR. Connect only the white or red plug for audio to the VCR. If you connect the white plug, the sound is L (left) signal. If you connect the red plug, the sound is R (right) signal.
- If you are going to connect the VCR using the S video cable **[a]**, you do not need to connect the yellow (video) plug of the A/V connecting cable **[b]**.
- If the S video jack is not provided on the TV or VCR, do not connect the S video cable to this VCR. Pictures will not appear.

To stop recording

Press □.

Notes on recording

- You cannot record a picture that has a copyright control signal for copyright protection of software. "COPY INHIBIT" appears if you try to record such a picture.
- If the VCR is kept in recording pause mode for more than five minutes, it automatically stops.

To record TV programs

The TGV-100 TV tuner unit (not supplied) enables you to record the TV program easily without connecting the VCR to the TV. See the operating instructions of the TV tuner unit for details.
The TV programs are recorded in the 16 bits mode.

Notas sobre la conexión

- Si la videograbadora (grabadora) es de tipo monofónico, conecte el enchufe amarillo del cable de conexión de A/V para video a la videograbadora. Conecte sólo el enchufe blanco o el rojo para audio a la videograbadora. Si conecta el enchufe blanco, el sonido será el de la señal izquierda (L). Si conecta el enchufe rojo, el sonido será el de la señal derecha (R).
- Si va a conectar la videograbadora con el cable de video S **[a]**, no es necesario conectar el enchufe amarillo (video) del cable de conexión de A/V **[b]**.
- Si el TV o la videograbadora no dispone de toma de video S, no conecte el cable de video S a esta videograbadora. Las imágenes no aparecerán.

Para detener la grabación

Presione □.

Notas sobre la grabación

- No es posible grabar imágenes que cuenten con señales de control de copyright de protección del software. Aparecerá "COPY INHIBIT" si intenta grabar dicho tipo de imágenes.
- Si la videograbadora permanece en el modo de pausa de grabación durante más de cinco minutos, se parará automáticamente.

Para grabar programas de TV

La unidad de sintonización de TV TGV-100 (no suministrada) permite grabar programas de TV con facilidad sin conectar la videograbadora al TV. Consulte el manual de instrucciones de dicha unidad para más información.
Los programas de TV se graban en el modo de 16 bits.

Audio dubbing

You can record an audio sound to add to the original sound on a tape by connecting audio equipment . You can add a sound on your recorded tape by specifying starting and ending points. The original sound will not be erased.
Do not connect the video (yellow) plug.

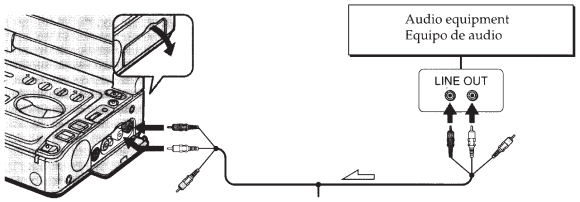

: Signal flow / Flujo de señales

A/V connecting cable (supplied)
Cable de conexión de A/V (suministrado)

Notes on audio dubbing

- A new sound cannot be recorded on a tape already recorded in the 16-bit mode (32 kHz, 44.1 kHz or 48 kHz).
- A new sound cannot be recorded on a tape already recorded in the LP mode.
- If you add a new sound on a tape recorded on other VCR (including GV-D900) or camcorder, the sound quality may not be as good as for the tape recorded on this VCR.
- If you connect the TV to the VCR when you are recording audio, it may cause noise on the TV sound. But the noise is not recorded on the tape.
- When you record a playback pause picture with the DV cable, you cannot add audio to that portion of the tape.

Copia de audio

Es posible grabar sonido para añadirlo al original de una cinta conectando un equipo de audio. Es posible añadir sonido en la cinta grabada especificando los puntos de inicio y finalización.
El sonido original no se borrará.
No conecte el enchufe de video (amarillo).

Notas sobre la copia de audio

- No es posible grabar sonido nuevo en una cinta ya grabada en el modo de 16 bits (32 kHz, 44,1 kHz o 48 kHz).
- No es posible grabar sonido nuevo en una cinta ya grabada en el modo LP.
- Si añade sonido nuevo en una cinta grabada en otra videograbadora (incluida la GV-D900) o videocámara, es posible que la calidad de sonido no sea tan buena como la de la cinta grabada en esta videograbadora.
- Si conecta el TV a la videograbadora cuando esté grabando audio, es posible que se produzca ruido en el sonido de TV. El ruido no se graba en la cinta.
- Si graba una imagen de pausa de reproducción con el cable DV, no será posible añadir audio en esa parte de la cinta.

Adding an audio sound on a recorded tape

(1) Insert your recorded tape into the VCR.
(2) Set the POWER switch to ON.
(3) On this VCR, press ▷ to set it to playback mode, and then locate the point where the recording should begin. Then press ❚❚ to set it to playback pause mode.
(4) Press AUDIO DUB.
(5) Press ❚❚ on this VCR and at the same time start playing back the audio you want to record. The new sound will be recorded in stereo 2. The recorded sound in stereo 1 is not heard.
(6) Press □ at the point where you want to stop recording.

Adición de audio en una cinta grabada

(1) Inserte la cinta grabada en la videograbadora.
(2) Ajuste el interruptor POWER en ON.
(3) En esta videograbadora, presione ▷ para ajustarla en el modo de reproducción, y después localice el punto donde debe iniciarse la grabación. A continuación, presione ❚❚ para ajustarla en el modo de pausa de reproducción.
(4) Presione AUDIO DUB.
(5) Presione ❚❚ en esta videograbadora y, simultáneamente, inicie la reproducción del sonido que desee grabar. El sonido nuevo se grabará en estéreo 2. El sonido grabado en estéreo 1 no se escuchará.
(6) Presione □ en el punto donde desee detener la grabación.

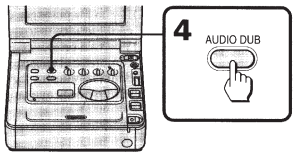

To play back the new recorded sound

Adjust the balance between the original sound (stereo 1) and the new sound (stereo 2) by selecting AUDIO MIX in the menu system.

Para reproducir el sonido nuevo grabado

Ajuste el balance entre el sonido original (estéreo 1) y el nuevo (estéreo 2); para ello, seleccione AUDIO MIX en el sistema de menús.

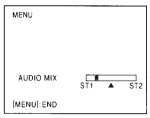

Five minutes after when you disconnect the power source, the setting of AUDIO MIX returns to the original sound (stereo 1) only. The factory setting is original sound only.

Cinco minutos después de desconectar la fuente de alimentación, el ajuste de AUDIO MIX volverá al sonido original (estéreo 1) solamente. El ajuste de fábrica es sonido original solamente.

Superimposing a title

If you use a tape with cassette memory, you can superimpose the titles during playback or playback pause.
When you play back the tape, the title is displayed for 5 seconds from the point where you superimposed it.
You can select from eight preset titles and one original (CUSTOM TITLE) to superimpose over the picture.

Superimposing a title

(1) Press TITLE to display the title.
(2) Turn the control dial to select the title, then press the control dial.
(3) Turn the control dial to select the color, size, or position, then press the control dial.
(4) Turn the control dial to select the desired item, then press the control dial.
(5) Repeat steps 3 and 4 until the title is arranged as desired.
(6) Press control dial again to complete the setting.
The "SAVE" appears on the screen for 5 seconds and the title is set.

Superposición de títulos

Si utiliza una cinta con memoria en cassette, podrá superponer los títulos durante los modos de reproducción o de pausa de reproducción.
Al reproducir la cinta, el título aparece durante 5 segundos a partir del punto en el que lo haya superpuesto.
Es posible realizar la selección entre ocho títulos predefinidos y uno original (CUSTOM TITLE) para superponerlo en la imagen.

Superposición de títulos

(1) Presione TITLE para que aparezcan los títulos.
(2) Gire el dial de control para seleccionar el título y, a continuación, presione dicho dial.
(3) Gire el dial de control para seleccionar el color, el tamaño o la posición y, a continuación, presione dicho dial.
(4) Gire el dial de control para seleccionar el elemento que desee y, a continuación, presione dicho dial.
(5) Repita los pasos 3 y 4 hasta que el título quede configurado como desee.
(6) Vuelva a presionar el dial de control para completar el ajuste.
La pantalla muestra "SAVE" durante 5 segundos y el título queda ajustado.

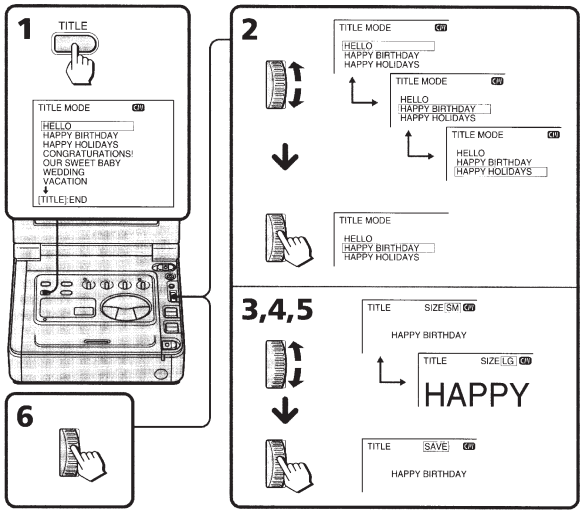

Superimposing a title / Superposición de títulos

Preset titles can be scrolled in the following order:
HELLO ↔ HAPPY BIRTHDAY ↔ HAPPY HOLIDAYS ↔ CONGRATULATIONS! ↔ OUR SWEET BABY ↔ WEDDING ↔ VACATION ↔ THE END ↔ CUSTOM TITLE.

When you have stored an original title
The title appears above "CUSTOM TITLE."

Title colors ("COL")
WHT(White) ↔ YEL(Yellow) ↔ CYAN(Cyan) ↔ GRN(Green) ↔ VIO(Violet) ↔ RED(Red) ↔ BLUE(Blue).

Title size ("SIZE")
LG(Large) ↔ SM(Small).

Title position ("POS")
If you select the title size "LG," you can choose 8 positions. When you select the title size "SM", you can choose 9 positions at all.

To display no title
Select OFF in the TITLE DSPL menu.

Notes on titles
- You cannot superimpose a title to a blank portion of the tape.
- The titles you superimposed are displayed by only using the DV format video equipment with index titler function.
- When you are searching the tape using the other video equipment, the portion of the tape you superimpose the title may be detected as an index signal.

Notes on the cassettes
- If you use a cassette tape set to prevent accidental erasure, you cannot superimpose the title. Slide the protect tab so that the red portion is not visible.
- You can superimpose about 11 to 20 titles in one cassette, if one title consists of about 5 characters.
- If the tape has too many index signals and photo data, you may not be able to superimpose a title because the memory is full.

Es posible mostrar los títulos predefinidos en el siguiente orden:
HELLO ↔ HAPPY BIRTHDAY ↔ HAPPY HOLIDAYS ↔ CONGRATULATIONS! ↔ OUR SWEET BABY ↔ WEDDING ↔ VACATION ↔ THE END ↔ CUSTOM TITLE.

Si ha almacenado un título original
El título aparece sobre "CUSTOM TITLE".

Colores de los títulos ("COL")
WHT(Blanco) ↔ YEL(Amarillo) ↔ CYAN(Cian) ↔ GRN(Verde) ↔ VIO(Violeta) ↔ RED(Rojo) ↔ BLUE(Azul).

Tamaño de los títulos ("SIZE")
LG(Grande) ↔ SM(Pequeño).

Posición de los títulos ("POS")
Si selecciona el tamaño "LG", podrá elegir 8 posiciones. Si selecciona el tamaño "SM", podrá elegir 9 posiciones.

Para no mostrar ningún título
Seleccione OFF en el menú TITLE DSPL.

Notas sobre los títulos
- No es posible superponer títulos en un espacio en blanco de la cinta.
- Los títulos superpuestos aparecerán sólo si utiliza equipos de video de formato DV con función de titulador de índices.
- Al realizar búsquedas en la cinta mediante el otro equipo de video, es posible que la parte de la cinta donde superponga el título se identifique como una señal de índice.

Notas sobre los videocassettes
- Si emplea una cinta de cassette ajustada para evitar borrados accidentales, no será posible superponer títulos. Deslice la lengüeta de protección de forma que la parte roja no sea visible.
- Es posible superponer aproximadamente de 11 a 20 títulos en un videocassette (si cada título se compone de unos 5 caracteres).
- Si la cinta contiene demasiadas señales de índice y datos de fotografías, es posible que no pueda superponer títulos debido a que la memoria esté llena.

Erasing a title / Eliminación de títulos

(1) Press MENU to display the menu.
(2) Turn the control dial to select TITLEERASE, then press the control dial.
(3) Turn the control dial to select the title you want to erase, then press the control dial.
(4) Make sure the title is the one you want to erase, then press control dial again.
(5) Press MENU to erase the menu display.

(1) Presione MENU para que aparezca el menú.
(2) Gire el dial de control para seleccionar TITLEERASE y, a continuación, presione dicho dial.
(3) Gire el dial de control para seleccionar el título que desee eliminar y, a continuación, presione dicho dial.
(4) Compruebe que el título sea el que desea eliminar y, a continuación, vuelva a presionar el dial de control.
(5) Presione MENU para que desaparezca el menú.

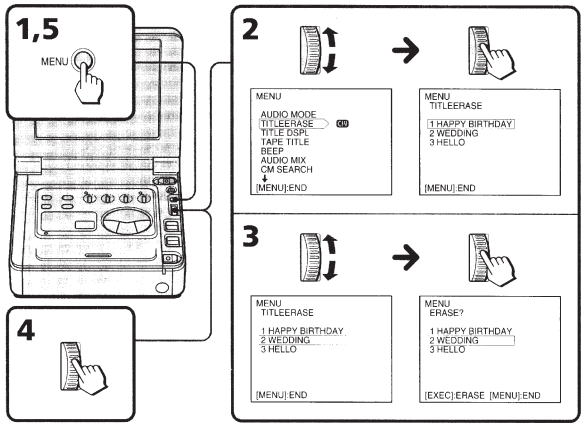

Note
If you use a cassette tape set to prevent accidental erasure, you cannot erase the title. Slide the protect tab so that the red portion is not visible.

Nota
Si emplea una cinta de cassette ajustada para evitar borrados accidentales, no será posible eliminar títulos. Deslice la lengüeta de protección de forma que la parte roja no sea visible.

Making a custom title / Creación de títulos personalizados

If you use a tape with cassette memory, you can make one title of up to 20 characters and store it in memory.

(1) Press TITLE to display the titles.
(2) Turn the control dial to select CUSTOM TITLE, then press the control dial.
(3) Turn the control dial to select the column of the desired character, then press the control dial.
(4) Turn the control dial to select the desired character, then press the control dial.
(5) Repeat steps 3 and 4 until you finish the title.
(6) Turn the control dial to select [↵], then press the control dial.

To erase a character
In step 3, turn the control dial to select [←] then press control dial. The last character is erased.

To change the title you have made
In step 2, turn the control dial to select the title which you want to change, then press the control dial. Erase characters one after another, then make the new title again.

Si utiliza una cinta con memoria en cassette, podrá crear un título compuesto por un máximo de 20 caracteres y almacenarlo en memoria.

(1) Presione TITLE para que aparezcan los títulos.
(2) Gire el dial de control para seleccionar CUSTOM TITLE y, a continuación, presione dicho dial.
(3) Gire el dial de control para seleccionar la columna del carácter que desee y, a continuación, presione dicho dial.
(4) Gire el dial de control para seleccionar el carácter que desee y, a continuación, presione dicho dial.
(5) Repita los pasos 3 y 4 hasta completar el título.
(6) Gire el dial de control para seleccionar [↵] y, a continuación, presione dicho dial.

Para borrar un carácter
En el paso 3, gire el dial de control para seleccionar [←] y, a continuación, presione dicho dial. El último carácter se borrará.

Para cambiar el título creado
En el paso 2, gire el dial de control para seleccionar el título que desee cambiar y, a continuación, presione dicho dial. Borre los caracteres uno por uno y, después, vuelva a crear un título.

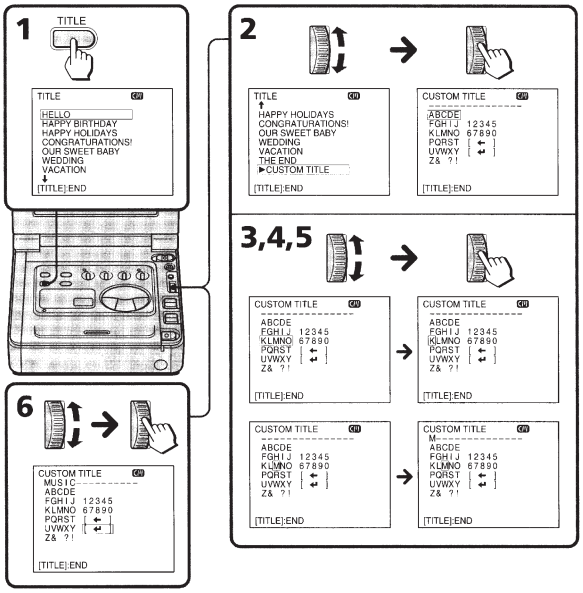

Labeling a cassette

If you use a tape with cassette memory, you can label a cassette. The label can consist of up to 10 characters and is stored in cassette memory. When you insert the labeled cassette and turn the power on, the label appears.

(1) Insert the cassette you want to label.
(2) Set the POWER switch to ON.
(3) Press MENU to display the menu.
(4) Turn the control dial to select TAPE TITLE, then press the control dial.
(5) Turn the control dial to select the column of the desired character, then press the control dial.
(6) Turn the control dial to select the desired character, then press the control dial.
(7) Repeat steps 5 and 6 until you finish the label.
(8) Turn the control dial to select [↵], then press the control dial.

To erase a character

In step 5 turn the control dial to select [←], then press the control dial. The last character is erased.

To change the label you have made

Insert the cassette to change the label, and operate in the same way to make a new label.

If the CLEAR mark appears in step 4

The cassette memory is full. If you erase the title in the cassette, you can label it.

If you have superimposed titles in the cassette

When the label is displayed, up to 4 titles also appear.

Note on "-----" displayed on the menu

The "-----" indicates the number of characters you can select for the label. When the "-----" indicator has fewer than 10 spaces, the cassette memory is full.

Note on the cassettes

If you use a cassette tape set to prevent accidental erasure, you cannot label it. Slide the protect tab so that the red portion is not visible.

Etiquetado de videocassettes

Si emplea una cinta con memoria en cassette, podrá etiquetar videocassettes. La etiqueta puede componerse de un máximo de 10 caracteres y se almacena en la memoria en cassette. Al insertar el videocassette etiquetado y activar la alimentación, la etiqueta aparecerá.

(1) Inserte el videocassette que desee etiquetar.
(2) Ajuste el interruptor POWER en ON.
(3) Presione MENU para que aparezca el menú.
(4) Gire el dial de control para seleccionar TAPE TITLE y, a continuación, presione dicho dial.
(5) Gire el dial de control para seleccionar la columna del carácter que desee y, a continuación, presione dicho dial.
(6) Gire el dial de control para seleccionar el carácter que desee y, a continuación, presione dicho dial.
(7) Repita los pasos 5 y 6 hasta finalizar la etiqueta.
(8) Gire el dial de control para seleccionar [↵] y, a continuación, presione dicho dial.

Para borrar un carácter

En el paso 5, gire el dial de control para seleccionar [←] y, a continuación, presione dicho dial. El último carácter se borrará.

Para cambiar la etiqueta creada

Inserte el videocassette para cambiar la etiqueta y realice el mismo procedimiento que para crear una etiqueta.

Si la marca CLEAR aparece en el paso 4

La memoria en cassette está llena. Si borra el título del videocassette, podrá etiquetarlo.

Si ha superpuesto títulos en el videocassette

Al aparecer la etiqueta, también aparecerán un máximo de 4 títulos.

Nota sobre "-----" mostrado en el menú

"-----" indica el número de caracteres que puede seleccionar para la etiqueta. Si el indicador "-----" tiene menos de 10 espacios significa que la memoria en cassette está llena.

Nota sobre los videocassettes

Si utiliza una cinta de cassette ajustada para evitar borrados accidentales, no podrá etiquetarla. Deslice la lengüeta de protección de forma que la parte roja no sea visible.

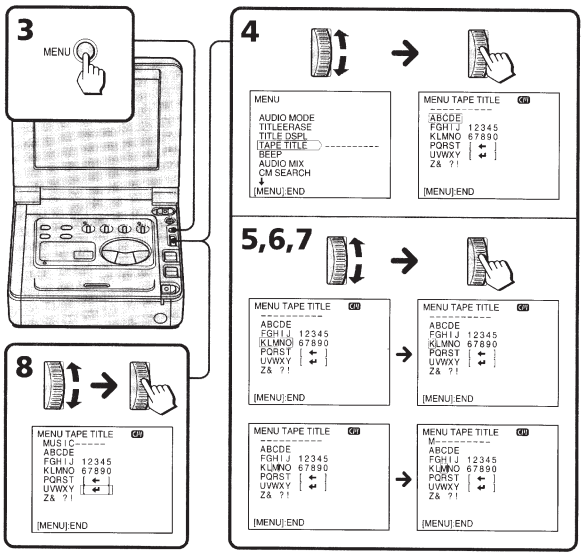

Assemble editing

What is assemble editing

"Editing" is to make a new tape from a prerecorded tape by deleting unnecessary scenes and allocating the scenes you want in the desired order.
This VCR has the assemble function which enables you to select scenes while playing back a tape. After all the scenes you want have been selected, the VCR automatically assembles them to be recorded on another tape.

Edición montada

Descripción de edición montada

"Editar" es crear una cinta a partir de otra previamente grabada mediante la eliminación de escenas innecesarias y la distribución de las escenas que se deseen en el orden deseado.
Esta videograbadora dispone de la función de edición montada que permite seleccionar escenas durante la reproducción de la cinta. Una vez seleccionadas las escenas deseadas, la videograbadora las monta automáticamente para grabarlas en otra cinta.

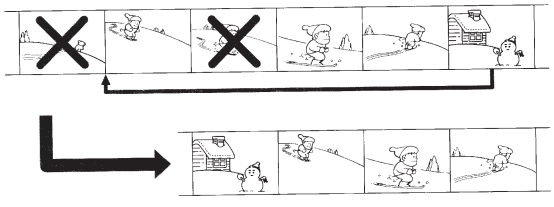

Assemble editing procedure

Preparation

This preparation is necessary only for the first time you do the assemble editing, as long as you use the same recording VCR.
(1) Connect the recording VCR.
(2) Set this VCR to control the recording VCR.
(3) Adjust the timing to start/stop recording.

Editing

(1) Select the scenes.
Mark the IN and OUT points for each scene.
"IN" point is the beginning of a scene.
"OUT" point is the end of a scene.
(2) Preview the scenes you selected.
(3) Execute the assemble editing.

Procedimiento para la edición montada

Preparativo

Este preparativo sólo es necesario para la primera vez que vaya a realizarse la edición montada, siempre que utilice la misma videograbadora grabadora.
(1) Conecte la videograbadora grabadora.
(2) Ajuste esta videograbadora para controlar la grabadora.
(3) Ajuste la temporización para iniciar/detener la grabación.

Edición

(1) Seleccione las escenas.
Marque los puntos IN y OUT para cada escena.
El punto "IN" es el principio de una escena.
El punto "OUT" es el final de una escena.
(2) Previsualice las escenas seleccionadas.
(3) Ejecute la edición montada.

Connecting the recording VCR

Use a VCR which is controlled by an infrared remote control system.
Connect the recording VCR in the same way as "Editing onto another tape" (p. 31).

Using the DV cable

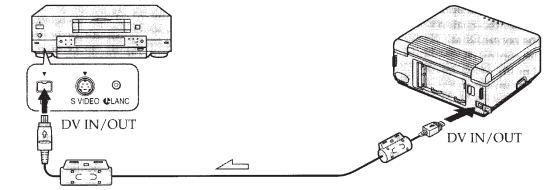

Using the A/V connecting cable or S video connecting cable

Set the input selector on the VCR to LINE.

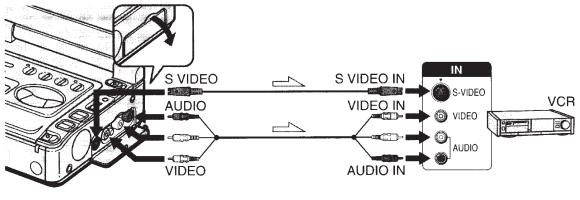

Conexión de la videograbadora grabadora

Utilice una videograbadora que se controle mediante un sistema infrarrojo de control remoto.
Conecte la videograbadora grabadora de la forma descrita en la sección "Edición en otra cinta" (p. 31).

Uso del cable DV

Uso del cable de conexión de A/V o de video S

Ajuste el selector de entrada de la videograbadora en LINE.

Setting the VCR to control the recording VCR

Ajuste de la videograbadora para controlar la videograbadora grabadora

Set the remote control mode and the button to release the recording pause mode according to the recording VCR.

(1) Press ASSEMBLE.
The ASSEMBLE menu appears.

To set the remote control mode

(2) Turn the control dial to select SET UP, then press the control dial.
The SET UP menu appears.

(3) Turn the control dial to select IR SET UP, then press the control dial.

(4) Turn the control dial to select the remote control mode of the recording VCR, then press the control dial.
Refer to the "VCR remote control mode list" on the next page. Try the number listed first.

To set the button to release the recording pause mode

(5) Turn the control dial to select PAUSE MODE, then press the control dial.

(6) Turn the control dial to select the button you press to release recording pause mode on the recording VCR, PAUSE or REC or PB (playback), then press the control dial.

Ajuste el modo de control remoto y el botón para cancelar el modo de pausa de grabación en función de la videograbadora grabadora.

(1) Presione ASSEMBLE.
Aparece el menú ASSEMBLE.

Para ajustar el modo de control remoto

(2) Gire el dial de control para seleccionar SET UP y, a continuación, presione dicho dial.
Aparece el menú SET UP.

(3) Gire el dial de control para seleccionar IR SET UP y, a continuación, presione dicho dial.

(4) Gire el dial de control para seleccionar el modo de control remoto de la videograbadora grabadora y, a continuación, presione dicho dial.
Consulte la "Lista de modo de control remoto de videograbadoras" de la página siguiente. Pruebe con el número que aparece en primer lugar.

Para ajustar el botón para cancelar el modo de pausa de grabación

(5) Gire el dial de control para seleccionar PAUSE MODE y, a continuación, presione dicho dial.

(6) Gire el dial de control para seleccionar el botón que presione para cancelar el modo de pausa de grabación en la videograbadora grabadora (PAUSE o REC o PB (reproducción)) y, a continuación, presione dicho dial.

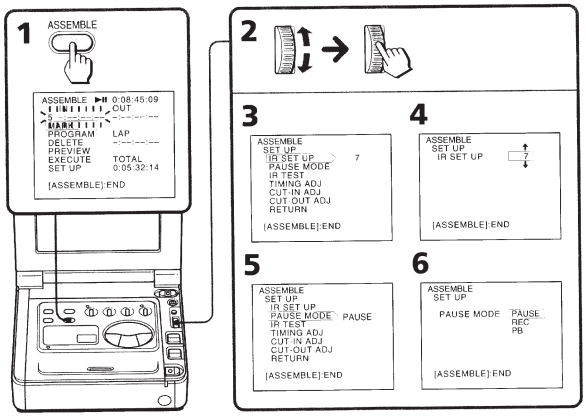

Setting the VCR to control the recording VCR

Ajuste de la videograbadora para controlar la videograbadora grabadora

VCR remote control mode list / Lista de modo de control remoto de videograbadoras

Brand / Marca	Remote control mode / Modo de control remoto
Sony	01, 02, 03, 04, 05, 06
Admiral (M. Wards)	89
Aiwa	80
Audio Dynamic	21, 35
Bell&Howell (M. Wards)	36
Brosconic	70, 82
Canon	77, 78
Citizen	47
Craig	73, 47
Curtis Mathis	08, 80, 77
Daewoo	26, 40, 77
DBX	21, 33, 35
Dimensia	08
Emerson	26, 82, 59, 48, 70, 81
Fisher	36, 45, 37, 44
Funai	80
General Electric	87, 08, 77, 32*, 94*
Goldstar	47
Hitachi	78, 08, 42
Instant Replay	77, 78
JC Penny	77, 42, 08, 36, 21, 33, 35
JVC	21, 12, 13, 14, 33, 35
Kenwood	21, 33, 47, 35
LXI (Sears)	80, 47, 42, 44, 45, 36, 37
Magnavox	83, 78, 77
Marantz	21, 33, 35
Marta	47
Memorex	77, 37
Minolta	42, 08
Mitsubishi/MGA	28, 22, 23, 24

Brand / Marca	Remote control mode / Modo de control remoto
Multitech	23, 80, 32
NEC	21, 33, 35
Olympic	77, 78
Panasonic	16, 17, 78, 77
Pentax	42, 08
Philco	78, 77
Philips	83, 78, 77
Pioneer	78
Quasar	78, 77, 16, 17
RCA/PROSCAN	08, 42, 16, 77, 83, 07, 40, 41, 78*
Realistic	77, 36
Sansui	21
Singer	73
Samsung	94, 41, 32, 32*, 94*, 24*
Sanyo	36, 37
Scott	40, 41, 32, 37, 28, 22, 23, 24
Sharp	89, 88
Shitom	73
Signature 2000 (M. Wards)	80, 89
Sylvania	83, 78, 77, 80
Symphonic	80
Tashiro	47
Tatung	21, 33, 35
Teac	21, 33, 80, 35
Technics	77, 78
Toshiba	40, 07
Wards	89, 88, 37, 95, 47
Yamaha	36, 21, 33, 35
Zenith	95

* TV/VCR component / Componente de TV/videograbadora

Setting the VCR to control the recording VCR

Ajuste de la videograbadora para controlar la videograbadora grabadora

Placing both VCRs

To operate the recording VCR with this VCR, place the VCRs about 1 foot (30 cm) apart from each other and point the assemble editing control emitter of this VCR at the remote sensor of the recording VCR.

Colocación de las videograbadoras

Para emplear la videograbadora grabadora con esta videograbadora, colóquelas dejando una distancia de 30 cm aproximadamente entre las dos y oriente el emisor de control de edición montada de esta videograbadora hacia el sensor de control remoto de la videograbadora grabadora.

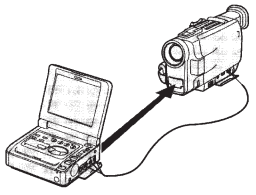

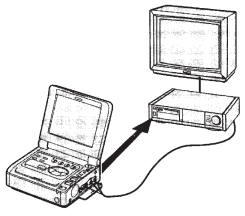

Trying the recording VCR

After the setting, make sure that you can operate the recording VCR with this VCR.

(1) On the SET UP menu, turn the control dial to select IR TEST, then press the control dial.

(2) Turn on the recording VCR. Insert a cassette that can be recorded and set the VCR to recording pause mode.

(3) Press the control dial.
If the setting was made correctly, the tape starts recording.
If the recording VCR does not operate, try another remote control mode.

Empleo de prueba de la videograbadora grabadora

Una vez realizado el ajuste, compruebe que es posible emplear la videograbadora grabadora con esta videograbadora.

(1) En el menú SET UP, gire el dial de control para seleccionar IR TEST y, a continuación, presione dicho dial.

(2) Encienda la videograbadora grabadora. Inserte un videocassette que pueda grabarse y ajuste la videograbadora en el modo de pausa de grabación.

(3) Presione el dial de control.
Si ha realizado el ajuste correctamente, la cinta comenzará a grabarse.
Si la videograbadora grabadora no funciona, pruebe con otro modo de control remoto.

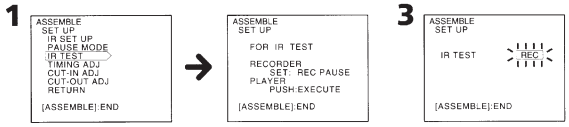

Adjusting the timing to start recording

Ajuste de temporización para iniciar la grabación

When a VCR is remote-controlled, there is time lag from when the VCR receives the signal to when it actually operates. The time lag differs depending on the recording VCR.
During the assemble editing, the time lag results in missing scenes or unnecessary scenes on the edited tape.
To edit scenes correctly, this VCR should send the recording start/stop signal early or late to the recording VCR.

Note on connection

To do the timing adjustment, connect the VCRs using the AV connecting cable.
You cannot do the timing adjustment when the VCRs are connected using the DV connecting cable.

Measuring the time lag

Have a pen or something write with.

(1) On the ASSEMBLE menu, turn the control dial to select TIMING ADJ, then press the control dial.

(2) Turn on the recording VCR and insert a cassette that can be recorded.

(3) Set the recording VCR to recording pause mode.

(4) Press the control dial.
The recording starts.
The "CUT-IN" and "CUT-OUT" points are recorded five times each. When the recording ends, the SET UP menu appears.

(5) Playback the tape in slow mode and write down the first figure displayed for each "CUT-IN" point and the last figure for each "CUT-OUT" point.

Al manejar una videograbadora mediante control remoto, existe una demora de tiempo desde que la videograbadora recibe la señal hasta que realmente la ejecuta. Dicha demora varía en función de la videograbadora grabadora.
Durante la edición montada, la demora de tiempo da como resultado pérdida de escenas o escenas innecesarias en la cinta editada.
Para editar escenas correctamente, esta videograbadora debe enviar antes o después la señal de inicio/parada de la grabación a la videograbadora grabadora.

Nota sobre la conexión

Para realizar el ajuste de temporización, conecte las videograbadoras mediante el cable de conexión de AV.
No es posible realizar el ajuste de temporización si las videograbadoras están conectadas mediante el cable de conexión DV.

Medida de la demora de tiempo

Tenga a mano un bolígrafo o similar.

(1) En el menú ASSEMBLE, gire el dial de control para seleccionar TIMING ADJ y, a continuación, presione dicho dial.

(2) Encienda la videograbadora grabadora e inserte un videocassette que pueda grabarse.

(3) Ajuste la videograbadora grabadora en el modo de pausa de grabación.

(4) Presione el dial de control.
Se inicia la grabación.
Los puntos "CUT-IN" y "CUT-OUT" se graban cinco veces cada uno. Al finalizar la grabación, aparece el menú SET UP.

(5) Reproduzca la cinta en el modo de reproducción a cámara lenta y anote la primera cifra mostrada de cada punto "CUT-IN" y la última cifra de cada punto "CUT-OUT".

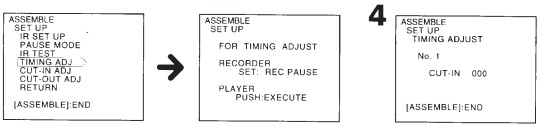

Adjusting the timing to start recording

Ajuste de temporización para iniciar la grabación

Adjusting the timing

Calculate the average of the five figures for the "CUT-IN" point and do the same for the "CUT-OUT" point.
Example:
(5 + 6 + 5 + 4 + 5) ÷ 5 = 5

(1) Turn the control dial to select "CUT-IN ADJ," then press the control dial.
(2) Turn the control dial until the average you calculated for the "CUT-IN" point appears, then press the control dial.
(3) Turn the control dial to select "CUT-OUT ADJ," then press the control dial.
(4) Turn the control dial until the average you calculated for the "CUT-OUT" point appears, then press the control dial.
(5) Turn the control dial to select RETURN, then press the control dial.
The ASSEMBLE menu appears.

Ajuste de la temporización

Calcule la media de las cinco cifras del punto "CUT-IN" y haga lo mismo para el punto "CUT-OUT".
Ejemplo:
(5 + 6 + 5 + 4 + 5) ÷ 5 = 5

(1) Gire el dial de control para seleccionar "CUT-IN ADJ" y, a continuación, presione dicho dial.
(2) Gire el dial de control hasta que aparezca la media que ha calculado para el punto "CUT-IN" y, a continuación, presione dicho dial
(3) Gire el dial de control para seleccionar "CUT-OUT ADJ" y, a continuación, presione dicho dial.
(4) Gire el dial de control hasta que aparezca la media que ha calculado para el punto "CUT-OUT" y, a continuación, presione dicho dial.
(5) Gire el dial de control para seleccionar RETURN y, a continuación, presione dicho dial.
Aparece el menú ASSEMBLE.

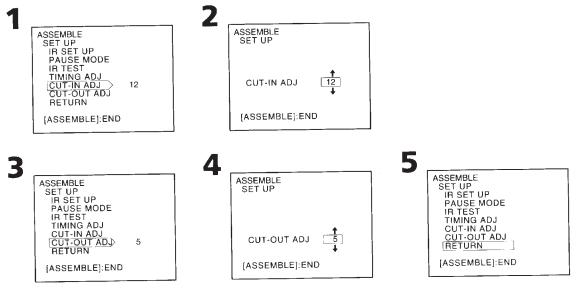

To turn off the ASSEMBLE menu
Press ASSEMBLE.

Para desactivar el menú ASSEMBLE
Presione ASSEMBLE.

Selecting scenes

Selección de escenas

Select the scenes in the order you want to edit. One scene selected for editing is called "a cut."
You can select a cut in the unit of a frame.
In the following operations:
• the "IN point" means the beginning of a cut
• the "OUT point" means the end of a cut

(1) Insert the playback cassette in this VCR and the recording cassette in the recording VCR.
(2) Playback the tape in this VCR.
(3) Press ASSEMBLE to display the ASSEMBLE menu.
(4) Using the tape transport buttons, locate the IN point and set to playback pause mode.
(5) Press the control dial.
The IN point is marked.
(6) Using the tape transport buttons, locate the OUT point and set to playback pause mode.
(7) Press the control dial.
(8) Repeat steps 4 to 7 to select cuts.

Seleccione las escenas en el orden en que desee editarlas. Cada escena seleccionada para editar se denomina "corte". Es posible seleccionar un corte en unidades de un fotograma.
En las siguientes operaciones:
• el punto "IN" significa el principio de un corte
• el punto "OUT" significa el final de un corte

(1) Inserte el videocassette de reproducción en esta videograbadora y el videocassette de grabación en la videograbadora grabadora.
(2) Reproduzca la cinta de esta videograbadora.
(3) Presione ASSEMBLE para que aparezca el menú ASSEMBLE.
(4) Mediante los botones de transporte de cinta, localice el punto IN y ajústelo en el modo de pausa de reproducción.
(5) Presione el dial de control.
Se marca el punto IN.
(6) Mediante los botones de transporte de cinta, localice el punto OUT y ajústelo en el modo de pausa de reproducción.
(7) Presione el dial de control.
(8) Repita los pasos 4 a 7 para seleccionar cortes.

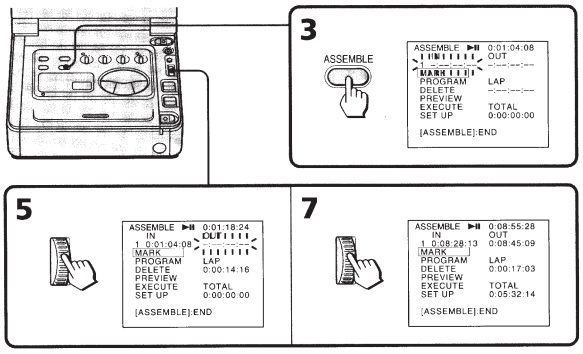

To change or delete cuts
See pages 55 and 56.

Para cambiar o eliminar cortes
Consulte las páginas 55 y 56.

Previewing scenes

Previsualización de escenas

After selecting cuts, make sure that the IN and OUT points are correctly marked.
(1) Press ASSEMBLE to display the ASSEMBLE menu.
(2) Turn the control dial to select PREVIEW, then press the control dial.
The PREVIEW menu appears.
(3) Turn the control dial to select the cut you want to check, then press the control dial.
The VCR sends the tape to the IN point of the selected cut and plays back the cut.
After the playback, the ASSEMBLE menu appears.
To preview other cuts, repeat steps 2 and 3.

Una vez seleccionados los cortes, compruebe que los puntos IN y OUT se han marcado correctamente.
(1) Presione ASSEMBLE para que aparezca el menú ASSEMBLE.
(2) Gire el dial de control para seleccionar PREVIEW y, a continuación, presione dicho dial.
Aparece el menú PREVIEW.
(3) Gire el dial de control para seleccionar el corte que desee comprobar y, a continuación, presione dicho dial.
La videograbadora ajusta la cinta en el punto IN del corte seleccionado y reproduce dicho corte.
Después de la reproducción, aparece el menú ASSEMBLE.
Para previsualizar otros cortes, repita los pasos 2 y 3.

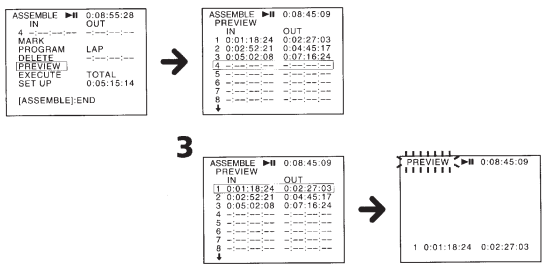

To stop previewing
Press □.

Para detener la previsualización
Presione □.

Previewing scenes

Previsualización de escenas

Changing the IN/OUT point of a cut

Cambio del punto IN/OUT de un corte

You can reselect the IN and OUT points.
(1) Press ASSEMBLE to display the ASSEMBLE menu.
(2) Turn the control dial to select PROGRAM, then press the control dial.
The list of the IN and OUT points appears.
(3) Turn the control dial to select the IN or OUT point you want to change, then press the control dial.
The selected point flashes.
(4) Reselect the point.

Es posible volver a seleccionar los puntos IN y OUT.
(1) Presione ASSEMBLE para que aparezca el menú ASSEMBLE.
(2) Gire el dial de control para seleccionar PROGRAM y, a continuación, presione dicho dial.
Aparece la lista de los puntos IN y OUT.
(3) Gire el dial de control para seleccionar el punto IN o OUT que desee cambiar y, a continuación, presione dicho dial.
El punto seleccionado parpadea.
(4) Vuelva a seleccionar el punto.

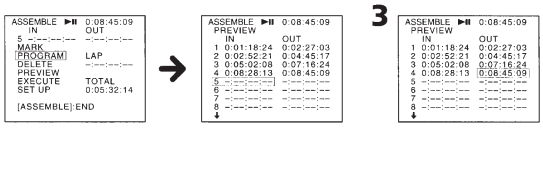

Previewing scenes

Previsualización de escenas

Deleting cuts

Deleting a cut

(1) Press ASSEMBLE to display the ASSEMBLE menu.
(2) Turn the control dial to select DELETE, then press the control dial.
(3) Turn the control dial to select 1PGM DELETE, then press the control dial.
(4) Turn the control dial to select the cut you want to delete, then press the control dial.
The IN and OUT points become "-:--:--:--" and then the display returns to the ASSEMBLE menu.
To delete other cuts, repeat steps 2, 3 and 4.

2

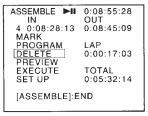

3

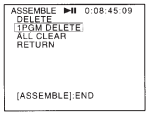

4

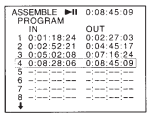

Deleting all cuts

(1) Press ASSEMBLE to display the ASSEMBLE menu.
(2) Turn the control dial to select DELETE, then press the control dial.
(3) Turn the control dial to select ALL CLEAR, then press the control dial.
(4) Turn the control dial to select ALL CLEAR, then press the control dial.
The ASSEMBLE menu appears.

2

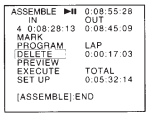

3

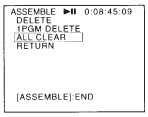

4

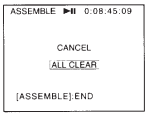

To cancel deleting
Select CANCEL in step 4.

Eliminación de cortes

Eliminación de cortes

(1) Presione ASSEMBLE para que aparezca el menú ASSEMBLE.
(2) Gire el dial de control para seleccionar DELETE y, a continuación, presione dicho dial.
(3) Gire el dial de control para seleccionar 1PGM DELETE y, a continuación, presione dicho dial.
(4) Gire el dial de control para seleccionar el corte que desee eliminar y, a continuación, presione dicho dial.
Los puntos IN y OUT aparecen como "-:--:--:--" y, después, vuelve a aparecer el menú ASSEMBLE. Para eliminar otros cortes, repita los pasos 2, 3 y 4.

Eliminación de todos los cortes

(1) Presione ASSEMBLE para que aparezca el menú ASSEMBLE.
(2) Gire el dial de control para seleccionar DELETE y, a continuación, presione dicho dial.
(3) Gire el dial de control para seleccionar ALL CLEAR y, a continuación, presione dicho dial.
(4) Gire el dial de control para seleccionar ALL CLEAR y, a continuación, presione dicho dial.
Aparece el menú ASSEMBLE.

Para cancelar la eliminación
Seleccione CANCEL en el paso 4.

Executing the assemble editing

Ejecución de la edición montada

The selected cuts are automatically assembled and recorded on the tape in the recording VCR.
(1) Insert the recording tape in the recording VCR, and set to recording pause mode.
(2) Press ASSEMBLE to display the ASSEMBLE menu.
(3) Turn the control dial to select EXECUTE, then press the control dial.
The EDITING display instructs you to set the recording VCR to recording pause mode and to press the control dial.
(4) Press the control dial.
The assemble editing starts. When it is completed, both VCRs stop automatically.

Los cortes seleccionados se montan y se graban automáticamente en la cinta en la videograbadora grabadora.
(1) Inserte la cinta de grabación en la videograbadora grabadora, y ajústela en el modo de pausa de grabación.
(2) Presione ASSEMBLE para que aparezca el menú ASSEMBLE.
(3) Gire el dial de control para seleccionar EXECUTE y, a continuación, presione dicho dial.
La pantalla EDITING solicita ajustar la videograbadora grabadora en el modo de pausa de grabación y presionar el dial de control.
(4) Presione el dial de control.
Se inicia la edición montada. Una vez finalizada, ambas videograbadoras se detienen automáticamente.

3

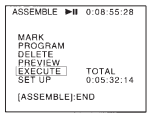

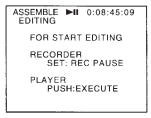

4

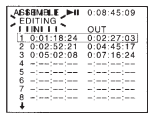

Additional information

Usable cassettes and playback modes

Información complementaria

Videocassettes utilizables y modos de reproducción

Selecting cassette types

You can use the mini DV ^{Mini}DV cassette only. You cannot use any other DV DV, 8 8 mm, Hi8 Hi8, VHS VHS, S VHS S-VHS, VHSC VHSC, S VHSC S-VHSC or ß Betamax cassette.

We recommend mini DV cassette with cassette memory.
There are two types of mini DV cassettes: with cassette memory and without cassette memory. We recommend you to use the tape with cassette memory. The IC memory is mounted on this type of mini DV cassette. This VCR can read and write data such as dates of recording or titles, etc. to this memory. Tapes with cassette memory have CAM (Cassette Memory) mark. Sony recommends that you use a tape having CAM mark to enjoy this VCR fully.

When you play back

Copyright signal
Using this VCR, you cannot play back a tape that has recorded a copyright control signals for copyright protection of software. "COPY INHIBIT" appears on the LCD screen or on the TV screen if you try to play back such a tape. This VCR does not record copyright control signals on the tape when it records.

Audio mode
12-bit mode: The original sound can be recorded in stereo 1, and the new sound in stereo 2 in 32 kHz. The balance between stereo 1 and stereo 2 can be adjusted by selecting AUDIO MIX in the menu system during playback. Both sounds can be played back.
16-bit mode: A new sound cannot be recorded but the original sound can be recorded in high quality. Moreover, it can also play back sound recorded in 32 kHz, 44.1 kHz or 48 kHz. When playing back a tape recorded in the 16-bit mode, 16BIT indicator appears.

Selección del tipo de videocassette

Sólo es posible utilizar minicassettes DV ^{Mini}DV. No es posible utilizar otros tipos de videocassettes DV DV, 8 8 mm, Hi8 Hi8, VHS VHS, S VHS S-VHS, VHSC VHSC, S VHSC S-VHSC o ß Betamax.

Se recomienda el uso de minicassettes DV con memoria en cassette.
Existen dos tipos de minicassettes DV: con memoria en cassette y sin memoria en cassette. Se recomienda emplear la cinta con memoria en cassette. La memoria IC está instalada en este tipo de minicassettes DV. Esta videograbadora puede leer y registrar datos, como la fecha de grabación o los títulos, etc., en esta memoria. Las cintas que disponen de memoria en cassette presentan la marca CAM (Memoria en cassette). Sony recomienda emplear cintas que presenten la marca CAM para obtener el máximo rendimiento de esta videograbadora.

Al reproducir

Señal de copyright
Con esta videograbadora, no es posible reproducir cintas que cuenten con señales de control de copyright de protección del software. "COPY INHIBIT" aparecerá en la pantalla LCD o en la pantalla del TV si intenta reproducir dicho tipo de cintas. Esta videograbadora no graba señales de control de copyright en la cinta durante la grabación.

Modo de audio
Modo de 12 bits: El sonido original puede grabarse en estéreo 1 y el sonido nuevo en estéreo 2 en 32 kHz. El balance entre estéreo 1 y estéreo 2 puede ajustarse mediante la selección de AUDIO MIX en el sistema de menús durante la reproducción. Es posible reproducir ambos sonidos.
Modo de 16 bits: Aunque no es posible grabar sonido nuevo, el sonido original puede grabarse con alta calidad. Además, también es posible reproducir sonido grabado en 32 kHz, 44,1 kHz o 48 kHz. Al reproducir una cinta grabada en el modo de 16 bits, aparece el indicador 16BIT.

Usable cassettes and playback modes

Videocassettes utilizables y modos de reproducción

Notes on the mini DV cassette

To prevent accidental erasure
Slide out the protect tab on the cassette so that the red portion is visible. **[a]**

When affixing a label on the mini DV cassette
Be sure to affix a label on only the location as illustrated below so as not to cause malfunction of the VCR. **[b]**

After using the mini DV cassette
Rewind the tape to the beginning, put the cassette in its case, and store it in an upright position.

Notas sobre los minicassettes DV

Para evitar borrados accidentales
Deslice la lengüeta de protección del videocassette de forma que la parte roja sea visible **[a]**.

Al adherir una etiqueta en el minicassette DV
Asegúrese de adherir la etiqueta únicamente en el espacio que se muestra en la ilustración que aparece a continuación con el fin de evitar fallos de funcionamiento de la videograbadora **[b]**.

Después de utilizar el minicassette DV
Rebobine la cinta hasta el principio, meta el videocassette en su caja y guárdelo en posición vertical.

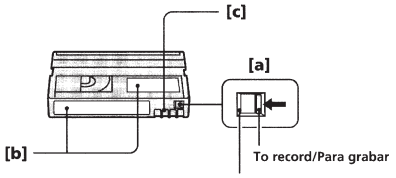

Slide out to prevent accidental erasure./
Deslícela para evitar borrados accidentales.

Note on gold-plated connector
If the gold-plated connector of mini DV cassettes is dirty or dusty, you may not operate the function using cassette memory. Clean up the gold-plated connector with cotton-wool swab, about every 10 times ejection of a cassettes. **[c]**

Nota sobre el conector chapado en oro
Si el conector chapado en oro de los minicassettes DV está sucio o tiene polvo, es posible que no pueda utilizar las funciones de memoria en cassette. Limpie el conector con un bastoncillo de algodón cada 10 veces que expulse videocassettes **[c]**.

Charging the vanadium-lithium battery in the VCR

Your VCR is supplied with a vanadium-lithium battery installed so as to retain the menu settings, regardless of the setting of the POWER switch. The vanadium-lithium battery is always charged as long as you are using the VCR. The battery, however, will get discharged gradually if you do not use the VCR. It will be completely discharged in about 1 year if you do not use the VCR at all. Even if the vanadium-lithium battery is not charged, it will not affect the VCR operation. To retain the menu settings, charge the battery if the battery is discharged. The following are charging methods:

- Connect the VCR to a wall outlet using the supplied AC adaptor/charger, and leave the VCR with the POWER switch turned off for more than 24 hours.
- Install the fully charged battery pack on the VCR, and leave the VCR with the POWER switch turned off for more than 24 hours.

Carga de la pila de vanadio-litio de la videograbadora

La videograbadora se suministra con una pila de vanadio-litio instalada con el fin de conservar los ajustes de menú, independientemente del ajuste del interruptor POWER. Dicha pila siempre está cargada en tanto utilice la videograbadora. No obstante, se descargará gradualmente si no utiliza la videograbadora. Se descargará por completo en 1 año aproximadamente si no emplea la videograbadora en absoluto. Aunque la pila de vanadio-litio no esté cargada, no afectará al funcionamiento de la videograbadora. Para conservar los ajustes de menú, cargue la pila si está descargada. A continuación, se describen métodos de carga:

- Conecte la videograbadora a la toma de corriente con el cargador/adaptador de CA suministrado, y deje dicha videograbadora con el interruptor POWER apagado durante más de 24 horas.
- Instale el paquete de batería completamente cargado en la videograbadora, y deje ésta con el interruptor POWER apagado durante más de 24 horas.

Resetting the date and time

The date and time are set at the factory. Set the time according to the local time in your country. If you do not use the VCR for about a year, the date and time settings may be released (bars may appear) because the vanadium-lithium battery installed in the VCR will have been discharged. In this case, first charge the vanadium-lithium battery, then reset the date and time.

(1) Set the POWER switch to ON.
(2) Press MENU to display the menu.
(3) Turn the control dial to select CLOCK SET, then press the control dial.
(4) Turn the control dial to adjust the year, and then press the control dial.
(5) Set the month, day, hour and minutes by turning and pressing the control dial.
(6) Press MENU to erase the menu.

Reajuste de la fecha y hora

La fecha y hora están ajustados de fábrica. Ajuste la hora a la local de su país. Si no utiliza la videograbadora durante un año aproximadamente, los ajustes de fecha y hora pueden cancelarse (pueden aparecer barras), ya que la pila de vanadio-litio instalada en la videograbadora se habrá descargado. En este caso, cargue primero dicha pila y, a continuación, vuelva a ajustar la fecha y la hora.

(1) Ajuste el interruptor POWER en ON.
(2) Presione MENU para que aparezca el menú.
(3) Gire el dial de control para seleccionar CLOCK SET y, a continuación, presione dicho dial.
(4) Gire el dial de control para ajustar el año y, a continuación, presione dicho dial.
(5) Ajuste el mes, el día, la hora y los minutos girando y presionando el dial de control.
(6) Presione MENU para que desaparezca el menú.

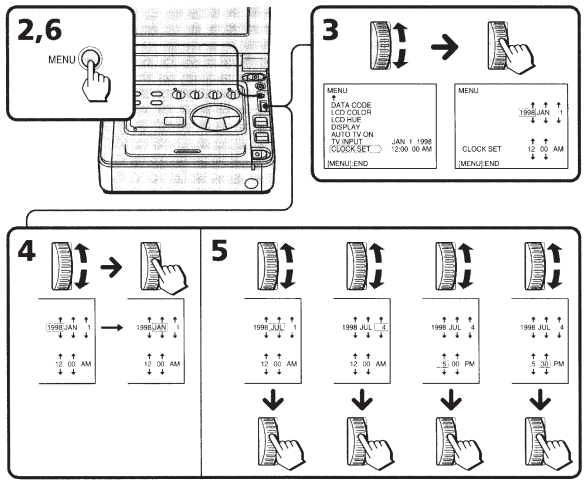

Resetting the date and time

To correct the date and time setting

Repeat steps 2 to 6.

The year indicators changes as follows:

→ 1998 → 1999 → ..... 2000 ..... → 2029 →

Note on the time indicator

The internal clock of this VCR operates on a 12-hour cycle.

- 12:00 AM stands for midnight.
- 12:00 PM stands for noon.

Reajuste de la fecha y hora

Para corregir el ajuste de fecha y hora

Repita los pasos 2 a 6.

El indicador de año cambia de la siguiente forma:

→ 1998 → 1999 → ..... 2000 ..... → 2029 →

Nota sobre el indicador de hora

El reloj interno de esta videograbadora utiliza el ciclo de 12 horas.

- 12:00 AM corresponde a la medianoche.
- 12:00 PM corresponde al mediodía.

Notes on "InfoLITHIUM" battery pack

"InfoLITHIUM" battery pack

The "InfoLITHIUM" battery pack is a lithium battery pack which can exchange data with compatible video equipment about its battery consumption.
Sony recommends that you use the "InfoLITHIUM" battery pack with video equipment having the (i) InfoLITHIUM mark.
When you use this battery pack with video equipment having the (i) InfoLITHIUM mark, the video equipment will indicate the remaining battery time in minutes.* However, if you use it with video equipment not having this mark, the remaining battery capacity will not be indicated in minutes.

* The indication may not be accurate depending on the condition and environment which the equipment is used under.

How the battery consumption is displayed

The power consumption of the VCR changes depending on its use.
While checking the condition of the VCR, the "InfoLITHIUM" battery pack measures the battery consumption and calculates the remaining battery power. If the condition changes drastically, the remaining battery indication may suddenly decrease or increase by more than 2 minutes. Even if 5 to 10 minutes is indicated as the battery remaining time on the LCD screen, the ⏍ indicator may also flash under some conditions.

Notas sobre el paquete de batería "InfoLITHIUM"

Paquete de batería "InfoLITHIUM"

"InfoLITHIUM" es un paquete de batería de litio que puede intercambiar datos con equipos de video compatibles sobre su consumo de energía.
Sony recomienda el empleo del paquete de batería "InfoLITHIUM" con equipos de video que presenten la marca (i) InfoLITHIUM.
Si utiliza este paquete de batería con un equipo de video que presente la marca (i) InfoLITHIUM, dicho equipo indicará el tiempo de batería restante en minutos*. No obstante, si lo utiliza con un equipo que no presente dicha marca, la capacidad de batería restante no se indicará en minutos.

* La indicación puede no ser precisa en función de la condición y entorno en los que se emplee el equipo.

Cómo se muestra el consumo de batería

El consumo de energía de la videograbadora cambia dependiendo de su uso.
Mientras comprueba la condición de la videograbadora, el paquete de batería "InfoLITHIUM" mide el consumo de energía y calcula la energía restante de la batería. Si la condición cambia drásticamente, es posible que la indicación de batería restante disminuya o aumente repentinamente en más de 2 minutos. Aunque se indiquen de 5 a 10 minutos como el tiempo de batería restante en la pantalla LCD, es posible que el indicador ⏍ también parpadee en ciertas condiciones.

Notes on "InfoLITHIUM" battery pack

To obtain more accurate remaining battery indication

- If the indication seems incorrect, use up the battery pack and then recharge it fully (Full charge [1]). Note that if you have used the battery in a hot or cold environment for long time, or you have repeated charging many times, the battery pack may not be able to show the correct time even after being fully charged.
- After you have used the "InfoLITHIUM" battery pack with an equipment not having the InfoLITHIUM mark, make sure that you use up the battery pack on the equipment having the InfoLITHIUM mark and then recharge fully.

Why the remaining battery indication does not match the battery life in the operating instructions

The battery life is affected by the environmental temperature and conditions. The battery life becomes very short in a cold environment. The battery life in the operating instructions is measured under the condition of using a fully charged (or normal charged [2]) battery pack in 77°F (25°C). As the environmental temperature and condition are different when you actually use the VCR, the remaining battery time is not same as the battery life in the operating instructions.

[1] Full charge: charging until the CHARGE lamp of the AC adaptor/charger goes off and the battery mark becomes .

[2] Normal charge: charging until the battery mark of the AC adaptor/charger becomes .

Notas sobre el paquete de batería "InfoLITHIUM"

Para obtener una indicación de batería restante más precisa

- Si la indicación parece incorrecta, agote el paquete de batería y, a continuación, recárguelo por completo (carga completa [1]). Tenga en cuenta que si ha empleado la batería en un entorno cálido o frío durante mucho tiempo, o si ha repetido la carga muchas veces, es posible que el paquete de batería no pueda mostrar el tiempo correcto incluso después de cargarse por completo.
- Después de haber empleado el paquete de batería "InfoLITHIUM" con un equipo que no presente la marca InfoLITHIUM, asegúrese de agotar dicho paquete en el equipo que presente la marca InfoLITHIUM y, a continuación, recárguelo por completo.

Por qué la indicación de batería restante no coincide con la duración que aparece en el manual de instrucciones

La duración de la batería se ve afectada por las condiciones y temperatura ambientales. Dicha duración se reduce notablemente en entornos fríos. La duración de la batería que aparece en el manual de instrucciones se ha medido utilizando un paquete completamente cargado (o con carga normal [2]) a 77°F (25°C). Puesto que la condición y temperatura ambientales son diferentes cuando la videograbadora se utiliza en la realidad, la duración restante de la batería no es la misma que la que aparece en el manual de instrucciones.

[1] Carga completa: carga realizada hasta que el indicador CHARGE del cargador/adaptador de CA se apaga y la marca de batería aparece como .

[2] Carga normal: carga realizada hasta que la marca de batería del cargador/adaptador de CA aparece como .

Maintenance information and precautions

Información y precauciones sobre mantenimiento

Moisture condensation

If the VCR is brought directly from a cold place to a warm place, moisture may condense inside the VCR, on the surface of the tape, or on the head drum. In this condition, the tape may stick to the head drum and be damaged or the VCR may not operate correctly. To prevent possible damage under these circumstances, the VCR is furnished with moisture sensors. Take the following precautions.

Inside the VCR

If there is moisture inside the VCR, the beep sounds and the indicator flashes on the LCD screen. If this happens, none of the function except cassette ejection will work. Open the cassette compartment, turn off the VCR, and leave it about 1 hour. When ⏏ indicator flashes at the same time, the cassette is inserted in the VCR. Eject the cassette, turn off the VCR, and leave also the cassette about 1 hour.

How to prevent moisture condensation

When bringing the VCR from a cold place to a warm place, put the VCR in a plastic bag and allow it to adapt to room conditions over a period of time.

(1) Be sure to tightly seal the plastic bag containing the VCR.

(2) Remove the bag when the air temperature inside it has reached the temperature surrounding it (after about 1 hour).

Condensación de humedad

Si traslada la videograbadora directamente de un lugar frío a otro cálido, es posible que se condense humedad en el interior de la misma, en la superficie de la cinta o en el tambor del cabezal. En estas condiciones, la cinta puede adherirse en el tambor del cabezal y dañarse o la videograbadora puede no funcionar correctamente. Para evitar posibles daños en estas circunstancias, la videograbadora está equipada con sensores de humedad. Tome las siguientes precauciones.

Interior de la videograbadora

Si hay humedad en el interior de la videograbadora, se oirá un pitido y el indicador parpadeará en la pantalla LCD. Si esto ocurre, no se activará ninguna función, excepto la de expulsión de videocassettes. Abra el compartimiento de videocassettes, apague la videograbadora y no la utilice durante 1 hora aproximadamente. Si el indicador ⏏ parpadea simultáneamente, significa que el videocassette está insertado en la videograbadora. Expúlselo, apague la videograbadora y tampoco utilice el videocassette durante 1 hora aproximadamente.

Cómo evitar la condensación de humedad

Cuando traslade la videograbadora de un lugar frío a otro cálido, introdúzcala en una bolsa de plástico y deje que se adapte a las condiciones de la sala durante un espacio de tiempo.

(1) Asegúrese de cerrar herméticamente la bolsa de plástico en la que se encuentra la videograbadora.

(2) Retire la bolsa cuando la temperatura de su interior alcance la del lugar en la que se encuentra (después de 1 hora aproximadamente).

Maintenance information and precautions

Información y precauciones sobre mantenimiento

Video head cleaning

To ensure normal recording and clear pictures, clean the video heads.
The video heads may be dirty when:

- mosaic-pattern noise appears on the playback picture
- playback pictures do not move
- playback pictures are hardly visible
- playback pictures do not appear
- the ⊗ indicator and " CLEANING CASSETTE" message appear one after another or the ⊗ indicator flashes on the LCD screen

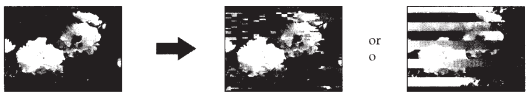

If **[a]** or **[b]** happens, clean the video heads with the Sony DVM12CL cleaning cassette (not supplied). Check the picture and if the above problem persists, repeat the cleaning. (Do not repeat cleaning more than 5 times in one session.)

Note

If the DVM12CL cleaning cassette (not supplied) is not available in your area, consult your nearest Sony dealer.

Limpieza de los cabezales de video

Para garantizar grabaciones normales e imágenes nítidas, limpie los cabezales de video.
Es posible que los cabezales de video estén sucios si:

- aparece ruido de patrón mosaico en la imagen de reproducción
- las imágenes de reproducción no se mueven
- las imágenes de reproducción apenas se ven
- las imágenes de reproducción no aparecen
- el indicador ⊗ y el mensaje " CLEANING CASSETTE" aparecen uno tras otro o el indicador ⊗ parpadea en la pantalla LCD

Si se produce **[a]** o **[b]**, limpie los cabezales de video con el cassette de limpieza Sony DVM12CL (no suministrado). Compruebe la imagen y si el problema anteriormente expuesto no se soluciona, repita la limpieza. (No repita la limpieza más de 5 veces en una sesión.)

Nota

Si el cassette de limpieza DVM12CL (no suministrado) no se encuentra disponible en su zona, consulte con el proveedor Sony más próximo.

Maintenance information and precautions

Información y precauciones sobre mantenimiento

Precautions

VCR operation

- Operate the VCR on 8.4 V (AC adaptor/charger) or 7.2 V (battery pack).
- Should any solid object or liquid get inside the casing, unplug the VCR and have it checked by Sony dealer before operating it any further.
- Avoid rough handling or mechanical shock.
- Keep the POWER switch set to OFF when not using the VCR.
- Do not wrap up the VCR and operate it since heat may build up internally.
- Keep the VCR away from strong magnetic fields or mechanical vibration.
- Do not push the LCD screen.
- If the VCR is used in a cold place, a residual image may appear on the LCD screen. This is not a malfunction.
- While using the VCR, the back of the LCD screen may heat up. This is not a malfunction.

On handling tapes

Do not insert anything in the small holes on the rear of the cassette. These holes are used to sense the type of tape, thickness of tape and if the recording tab is in or out.

VCR care

- When the VCR is not to be used for a long time, disconnect the power source and remove the tape. Periodically turn on the power, play back a tape for about 3 minutes.
- If fingerprints or dust are on the LCD screen, we recommend you remove them using the LCD cleaning kit (not supplied).
- Clean the VCR body with a dry soft cloth, or a soft cloth lightly moistened with a mild detergent solution. Do not use any type of solvent which may damage the finish.
- Do not let sand get into the VCR. When you use the VCR on a sandy beach or in a dusty place, protect it from the sand or dust. Sand or dust may cause the unit to malfunction, and sometimes this malfunction cannot be repaired.

Precauciones

Funcionamiento de la videograbadora

- Emplee la videograbadora con 8,4 V (cargador/adaptador de CA) o 7,2 V (paquete de batería).
- Si se introduce algún objeto sólido o líquido en la videograbadora, desenchúfela y haga que sea revisada por un proveedor Sony antes de volver a utilizarla.
- Evite manejarla bruscamente y los golpes mecánicos.
- Mantenga el interruptor POWER ajustado en OFF cuando no utilice la videograbadora.
- No cubra la videograbadora mientras la emplea, ya que puede producirse recalentamiento interno.
- Mantenga la videograbadora alejada de campos magnéticos intensos y de vibraciones mecánicas.
- No ejerza presión sobre la pantalla LCD.
- Si utiliza la videograbadora en un lugar frío, es posible que aparezca una imagen residual en la pantalla LCD. Esto no es un fallo de funcionamiento.
- Mientras emplea la videograbadora, es posible que la parte trasera de la pantalla LCD se caliente. Esto no es un fallo de funcionamiento.

Manejo de cintas

No inserte nada en los orificios pequeños de la parte posterior del videocassette. Estos orificios se utilizan para detectar el tipo de cinta, el grosor de ésta y si la lengüeta de grabación se encuentra dentro o fuera.

Cuidados de la videograbadora

- Si no va a utilizar la videograbadora durante mucho tiempo, desconecte la fuente de alimentación y extraiga la cinta. Periódicamente, active la alimentación y reproduzca una cinta durante unos 3 minutos.
- Si hay huellas dactilares o polvo en la pantalla LCD, se recomienda eliminarlos con un kit de limpieza para LCD (no suministrado).
- Limpie el exterior de la videograbadora con un paño seco y suave, o con un paño suave ligeramente humedecido con una solución detergente poco concentrada. No utilice ningún tipo de disolvente, ya que puede dañar el acabado.
- No permita que se introduzca arena en la videograbadora. Si la emplea en una playa de arena o en un lugar polvoriento, protéjala de la arena o del polvo. Estos elementos pueden producir fallos de funcionamiento en la unidad que a veces no puedan repararse.

Maintenance information and precautions

On AC adaptor/charger

Charging

- Use only a lithium ion type battery pack.
- Place the battery pack on a flat surface without vibration during charging.
- The battery pack will get hot during charging. This is normal.

Others

- Unplug the AC adaptor/charger from the wall outlet when not in use for a long time. To disconnect the power cord, pull it out by the plug. Never pull the cord itself.
- Do not operate the AC adaptor/charger with a damaged cord or if the AC adaptor/charger has been dropped or damaged.
- Do not bend the AC power cord forcibly, or put a heavy object on it. This will damage the cord and may cause a fire or an electrical shock.
- Be sure that nothing metallic comes into contact with the metal parts of the connecting plate. If this happens, a short may occur and the AC adaptor/charger may be damaged.
- Always keep the metal contacts clean.
- Do not disassemble the AC adaptor/charger.
- Do not apply mechanical shock or drop the AC adaptor/charger.
- While the AC adaptor/charger is in use, particularly during charging, keep it away from AM receivers and video equipment because it will disturb AM reception and video operation.
- The AC charger becomes warm while in use. This is normal.
- Do not place the AC adaptor/charger in locations that are:
  - Extremely hot or cold
  - Dusty or dirty
  - Very humid
  - Vibrating

If any difficulty should arise, unplug the unit and contact your nearest Sony dealer.

Información y precauciones sobre mantenimiento

Cargador/adaptador de CA

Carga

- Utilice sólo paquetes de batería de tipo ion de litio.
- Coloque el paquete de batería sobre una superficie plana sin vibraciones durante la carga.
- El paquete de batería se calienta durante la carga. Esto es normal.

Otros

- Desenchufe el cargador/adaptador de CA de la toma mural cuando no vaya a utilizarlo durante mucho tiempo. Para desconectar el cable de alimentación, tire del enchufe, nunca del propio cable.
- No utilice el cargador/adaptador de CA con un cable dañado o si dicho cargador se ha caído o dañado.
- No doble a la fuerza el cable de alimentación de CA, ni ponga objetos pesados sobre él. Si lo hace, el cable se dañará y puede causar un incendio o descargas eléctricas.
- Asegúrese de que ningún objeto metálico entra en contacto con los componentes metálicos de la placa de conexión. Si esto ocurre, puede producirse un cortocircuito y dañarse el cargador/adaptador de CA.
- Mantenga los contactos metálicos siempre limpios.
- No desmonte el cargador/adaptador de CA.
- No aplique golpes mecánicos al cargador/adaptador de CA ni lo deje caer.
- Mientras utiliza el cargador/adaptador de CA, particularmente durante la carga, manténgalo alejado de receptores de AM y de equipos de vídeo, ya que dificultará la recepción de AM y el funcionamiento del equipo.
- El cargador/adaptador de CA se calienta durante el uso. Esto es normal.
- No coloque el cargador/adaptador de CA en lugares:
  - Extremadamente fríos o cálidos
  - Polvorientos o sucios
  - Muy húmedos
  - Con vibraciones

Si surge alguna dificultad, desenchufe la unidad y póngase en contacto con el proveedor Sony más próximo.

Using your VCR abroad

Each country or area has its own electric and TV color systems. Before using your VCR abroad, check the following points.

Power sources

You can use your VCR in any country or area with the supplied AC adaptor/charger within 100 V to 240 V AC, 50/60 Hz.
Use a commercially available AC plug adaptor **[a]**, if necessary, depending on the wall outlet **[b]**.

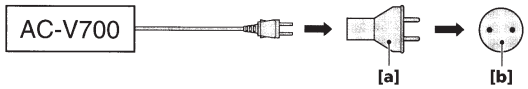

Difference in color systems

This VCR is an NTSC system-based VCR. If you want to view the playback picture on a TV, it must be an NTSC system-based TV.
Check the following list.

NTSC system
Bahama Islands, Bolivia, Canada, Central America, Chile, Colombia, Ecuador, Jamaica, Japan, Korea, Mexico, Peru, Surinam, Taiwan, the Philippines, the U.S.A., Venezuela, etc.

PAL system
Australia, Austria, Belgium, China, Czech Republic, Denmark, Finland, Germany, Great Britain, Holland, Hong Kong, Italy, Kuwait, Malaysia, New Zealand, Norway, Portugal, Singapore, Slovak Republic, Spain, Sweden, Switzerland, Thailand, etc.

PAL-M system
Brazil

PAL-N system
Argentina, Paraguay, Uruguay

SECAM system
Bulgaria, France, Guiana, Hungary, Iran, Iraq, Monaco, Poland, Russia, Ukraine, etc.

Uso de la videograbadora en el extranjero

Cada país o zona dispone de sus propios sistemas de electricidad y de color de TV. Antes de utilizar la videograbadora en el extranjero, compruebe los siguientes puntos.

Fuentes de alimentación

Es posible utilizar la videograbadora en cualquier país o zona con el cargador/adaptador de CA suministrado dentro del margen de 100 V a 240 V CA, 50/60 Hz.
Si es necesario, utilice un adaptador de enchufe de CA **[a]**, disponible en el mercado, en función de la toma mural **[b]**.

Diferencias en los sistemas de color

Esta videograbadora está basada en el sistema NTSC. Si desea ver la imagen de reproducción en un TV, éste debe estar basado en el sistema NTSC.
Consulte la siguiente lista.

Sistema NTSC
Islas Bahamas, Bolivia, Canadá, América Central, Chile, Colombia, Ecuador, Jamaica, Japón, Corea, México, Perú, Surinam, Taiwan, Filipinas, EE.UU., Venezuela, etc.

Sistema PAL
Australia, Austria, Bélgica, China, República Checa, Dinamarca, Finlandia, Alemania, Gran Bretaña, Holanda, Hong Kong, Italia, Kuwait, Malasia, Nueva Zelanda, Noruega, Portugal, Singapur, República Eslovaca, España, Suecia, Suiza, Tailandia, etc.

Sistema PAL-M
Brasil

Sistema PAL-N
Argentina, Paraguay, Uruguay

Sistema SECAM
Bulgaria, Francia, Guayana, Hungría, Irán, Irak, Mónaco, Polonia, Rusia, Ucrania, etc.

English

Trouble check

If you run into any problem using the VCR, use the following table to troubleshoot the problem. Should the difficulty persist, disconnect the power source and contact your Sony dealer or local authorized Sony service facility.

VCR

Power

Symptom	Cause and/or corrective actions
The power is not on.	• The AC adaptor/charger is not connected to a wall outlet. → Connect the AC adaptor/charger to a wall outlet. (p. 7) • The battery pack is not installed. → Install the battery pack. (p. 14) • The battery is dead. → Use a charged battery pack. (p. 14)
The battery pack is quickly discharged.	• The ambient temperature is too low. (p. 64) • The battery pack has not been charged fully. → Charge the battery pack again. (p. 14) • The battery pack is completely dead, and cannot be recharged. → Use another battery pack. (p. 13)

Operation

Symptom	Cause and/or corrective actions
The tape does not move when a tape transport button is pressed.	• The POWER switch is set to OFF. → Set it to ON. (p. 9) • The tape has run out. → Rewind the tape or use a new one. (p. 9)
The tape does not start.	• The tape is stuck to the drum. → Eject the cassette. (p. 8) • The tape has run out. → Rewind the tape or use a new one. (p. 9) • The tab on the cassette is out (red). → Use a new tape or slide the tab. (p. 8)
The cassette cannot be removed from the holder.	• The AC adaptor/charger is not connected to a wall outlet. → Connect the AC adaptor/charger to a wall outlet. (p. 7) • The battery is dead. → Use a charged battery pack or the AC adaptor/charger. (p. 7, 14)
⏻ and ⏏ indicators flash and no function except for cassette ejection works.	• Moisture condensation has occurred. → Remove the cassette and leave the VCR for at least 1 hour. (p. 65)
"CLOCK SET" appears when the VCR is turned on.	• Reset the date and time. (p. 61)

Trouble check

Operation

Symptom	Cause and/or corrective actions
No sound or only a low sound is heard when playing back a tape.	• The stereo tape is played back with HiFi SOUND set to 2 in the menu system. → Set it to STEREO. (p. 12) • The volume is turned to the minimum. → Open the LCD panel and press VOLUME +. (p. 9) • AUDIO MIX is set to ST2 side in the menu system. → Adjust AUDIO MIX in the menu system (p. 17).
The new sound added to the recorded tape is not heard.	• AUDIO MIX is set to ST1 side in the menu system. → Adjust AUDIO MIX in the menu system (p. 17).
The title is not displayed.	• TITLE DSPL is set to OFF in the menu system. → Set it to ON in the menu system. (p. 17)
The title is not recorded.	• The tape has no cassette memory. → Use a tape with cassette memory. (p. 38) • The cassette memory is full. → Erase another title. (p. 41) • The tape is set to prevent accidental erasure. → Slide the protect tab so that red portion is not visible. (p. 8) • Nothing is recorded in that position on the tape. → Superimpose the title to the recorded position. (p. 40)
The cassette label is not recorded.	• The tape has no cassette memory. → Use a tape with cassette memory. (p. 44) • The cassette memory is full. → Erase some titles. (p. 41) • The tape is set to prevent accidental erasure. → Slide the protect tab so that red portion is not visible. (p. 8)
Displaying the recorded date, date search function does not work.	• The tape has no cassette memory. → Use a tape with cassette memory. (p. 21) • CM SEARCH is set to OFF in the menu system. → Set it to ON. (p. 21)
The title search function does not work.	• The tape has no cassette memory. → Use a tape with cassette memory. (p. 23) • CM SEARCH is set to OFF in the menu system. → Set it to ON. (p. 23) • There is no title in the tape. → Superimpose the titles. (p. 38)
CHI indicator does not appear when using a tape with cassette memory.	• The gold-plated connector of the tape is dirty or dusty. → Clean the gold-plated connector. (p. 59)

Continued to the next page

Trouble check

Picture

Symptom	Cause and/or corrective actions
The picture is "noisy" or does not appear.	• The video heads may be dirty. → Clean the heads using the Sony DVM12CL (not supplied) cleaning cassette. (p. 66)
⊗ indicator flashes on the LCD screen.	• The video heads may be dirty. → Clean the heads using the Sony DVM12CL (not supplied) cleaning cassette. (p. 66)
The picture is too bright or too dark.	• LCD BRIGHT is not adjusted properly. → Press + or – to obtain the brightness you want. (p. 9)
The picture does not appear on the LCD screen.	• Incorporated fluorescent tube is worn out. → Please contact your nearest Sony dealer.

Others

Symptom	Cause and/or corrective actions
While editing using the DV connecting cable, recording picture cannot be monitored.	• Remove the DV connecting cable, and connect it again.
The VCR becomes warm.	• If the power of the VCR is on for a long time, it becomes warm, which is not malfunction.
No function works though the power is on.	• Disconnect the connecting plug on the AC adaptor/charger or the battery pack, then reconnect it in about one minute. Turn the power on. If the functions still do not work, press the RESET button at the bottom of the VCR using a sharp-pointed object. (If you press the RESET button, all the settings including the date and time return to the factory setting.) (p. 82)
The numbers or letters of 5 characters is displayed as a counter.	• Self-diagnosis function was activated. → See the table in page 74 and treat the VCR apropriately.

AC adaptor/charger

Symptom	Corrective actions
The VTR/CAMERA or CHARGE lamp does not light.	• Disconnect the power cord. After about one minute, reconnect the power cord. (p. 7)
The CHARGE lamp flashes.	• See the chart on the next page.

Trouble check

When the CHARGE lamp flashes

Check through the following chart.

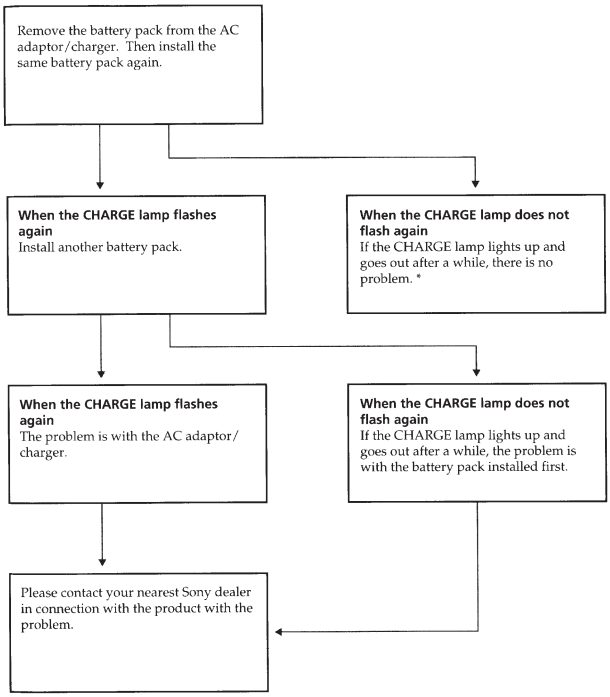
Remove the battery pack from the AC adaptor/charger. Then install the same battery pack again.
When the CHARGE lamp flashes again
Install another battery pack.
When the CHARGE lamp does not flash again
If the CHARGE lamp lights up and goes out after a while, there is no problem. *
When the CHARGE lamp flashes again
The problem is with the AC adaptor/charger.
When the CHARGE lamp does not flash again
If the CHARGE lamp lights up and goes out after a while, the problem is with the battery pack installed first.
Please contact your nearest Sony dealer in connection with the product with the problem.

* If you use a battery pack which you have just bought or which has been left unused for a long time, the CHARGE lamp may flash at the first charging. This does not indicate a problem. Repeat again to charge with same battery pack.

Self-diagnosis display

The VCR has a self-diagnosis display. This function displays the VCR's condition with five digits (a combination of a letter and figures) on the LCD screen. If this occurs, check the following code chart. The five-digit display informs you of the VCR's current condition. The last two digits (indicated by □□) will differ depending on the state of the VCR.

LCD screen

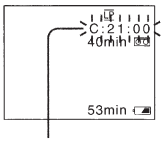

Self-diagnosis display

- C:□□:□□
  You can service the VCR yourself.
- E:□□:□□
  Contact your Sony dealer or local authorized Sony facility.

Five-digit display	Cause and/or corrective actions
C:21:□□	• Moisture condensation has occurred. → Remove the cassette and leave the VCR for at least 1 hour. (p. 65)
C:22:□□	• The video heads are dirty. → Clean the heads using the Sony DVM12CL cleaning cassette (not supplied). (p. 66)
C:23:□□	• You are using a battery pack that is not an "InfoLITHIUM" battery pack. → Use an "InfoLITHIUM" battery pack. (p. 63)
C:31:□□ C:32:□□	• A servicable situation not malfunctioned above has occurred. → Remove the cassette and insert it again, then operate the VCR. (p. 8) → Disconnect the power cord of the AC adaptor/charger or remove the battery pack. After reconnecting the power source, operate the VCR.
E:61:□□ E:62:□□	• A VCR malfunction which you cannot service has occurred. → Contact your Sony dealer or local authorized Sony service facility and inform them of the five digits. (example: E:61:10)

If you are unable to resolve the problem, contact your Sony dealer or local authorized Sony service facility.

Identifying the parts / Identificación de los componentes

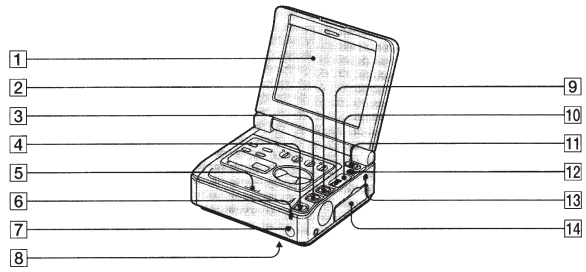

1 LCD screen

2 LCD BRIGHT buttons (p. 9)

3 VOLUME buttons (p. 9)

4 EJECT knob (p. 8)

5 Cassette compartment (p. 8)

6 POWER lamp (p. 9)

7 Remote sensor
Aim a Remote Commander (not supplied) here for remote control.

8 RESET button (bottom) (p. 72)

9 Control dial (p. 12, 17)

10 MENU button (p. 12, 17)

11 POWER switch (p. 9)

12 LASER LINK button (p. 29)

13 LANC control jack
stands for Local Application Control Bus System. The control jack is used for controlling the tape transport of video equipment and peripherals connected to it. This jack has the same function as the jack indicated as control L or REMOTE.

14 Jack cover (p. 28)

1 Pantalla LCD

2 Botones LCD BRIGHT (p. 9)

3 Botones VOLUME (p. 9)

4 Mando EJECT (p. 8)

5 Compartimiento de videocassettes (p. 8)

6 Indicador POWER (p. 9)

7 Sensor de control remoto
Oriente aquí el control remoto (no suministrado).

8 Botón RESET (base) (p. 72)

9 Dial de control (p. 12, 17)

10 Botón MENU (p. 12, 17)

11 Interruptor POWER (p. 9)

12 Botón LASER LINK (p. 29)

13 Toma de control LANC
significa sistema bus de control de aplicación local. La toma de control se utiliza para controlar el transporte de la cinta del equipo de vídeo y periféricos conectados a él. Esta toma tiene la misma función que la toma indicada como control L o REMOTE.

14 Cubierta de la toma (p. 28)

Identifying the parts / Identificación de los componentes

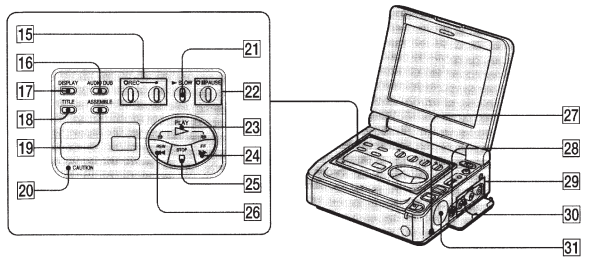

15 ● REC (recording) buttons and lamp (p. 34)

16 AUDIO DUB button (p. 37)

17 DISPLAY button (p. 9)

18 TITLE button (p. 39, 43)

19 ASSEMBLE button (p. 48)

20 CAUTION lamp (p. 86)

21 ▮► SLOW (slow) button (p. 11)

22 ▮▮ PAUSE (pause) button and lamp (p. 11)

23 ▷ PLAY (playback) button (p. 9)

24 ►► FF (fastforward) button (p. 9)

25 □ STOP (stop) button (p. 9)

26 ◄◄ REW (rewind) button (p. 9)

27 ∩ (headphones) jack (p. 9)

28 S VIDEO input/output jack (p. 28, 32, 34, 47)

29 VIDEO/AUDIO input/output jacks (p. 28, 32, 34, 47)

30 RFU DC OUT jack

31 Speaker

15 Botones e indicador ● REC (grabación) (p. 34)

16 Botón AUDIO DUB (p. 37)

17 Botón DISPLAY (p. 9)

18 Botón TITLE (p. 39, 43)

19 Botón ASSEMBLE (p. 48)

20 Indicador CAUTION (p. 86)

21 Botón ▮► SLOW (lento) (p. 11)

22 Botón e indicador ▮▮ PAUSE (pausa) (p. 11)

23 Botón ▷ PLAY (reproducción) (p. 9)

24 Botón ►► FF (avance rápido) (p. 9)

25 Botón □ STOP (parada) (p. 9)

26 Botón ◄◄ REW (rebobinado) (p. 9)

27 Toma ∩ (auriculares) (p. 9)

28 Toma de entrada/salida S VIDEO (p. 28, 32, 34, 47)

29 Tomas de entrada/salida VIDEO/AUDIO (p. 28, 32, 34, 47)

30 Toma RFU DC OUT

31 Altavoz

Identifying the parts / Identificación de los componentes

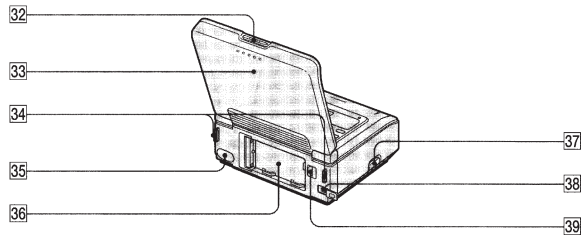

32 PUSH OPEN button (p. 8)

33 LCD panel

34 Hooks for shoulder strap

35 LASER LINK emitter (p. 29)/Assemble editing control emitter (p.50)

36 Battery mounting surface (p. 7)

37 RELEASE knob
Slide up to release the terminal cover when attaching an accessory (not supplied).

38 DV IN/OUT jack (p. 31, 47)
i
This "i.LINK" mark is a trademark of Sony Corporation and indicates that this product is in agreement with IEEE 1394-1995 specifications and their revisions.
The DV IN/OUT jack is i.LINK compatible.

39 BATT release lever (p. 7)

32 Botón PUSH OPEN (p. 8)

33 Panel LCD

34 Ganchos para el asa de hombro

35 Emisor LASER LINK (p. 29)/Emisor de control de edición montada (p. 50)

36 Superficie de montaje de la batería (p. 7)

37 Mando RELEASE
Deslícelo hacia arriba para liberar la cubierta del terminal al fijar un accesorio (no suministrado).

38 Toma DV IN/OUT (p. 31, 47)
i
"i.LINK" es una marca comercial de Sony Corporation e indica que este producto está de acuerdo con las especificaciones IEEE 1394-1995 y sus revisiones.
La toma DV IN/OUT es compatible con i.LINK.

39 Palanca de liberación BATT (p. 7)

Attaching the shoulder strap

Attach the supplied shoulder strap to the hooks for the shoulder strap.

Fijación del asa de hombro

Fije el asa suministrado en los ganchos para el mismo.

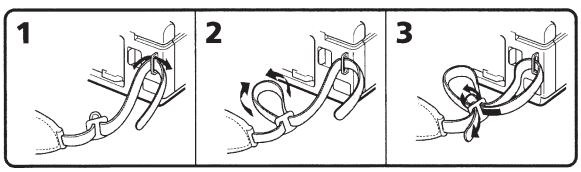

Identifying the Parts / Identificación de los componentes

Operation indicators / Indicadores de funcionamiento

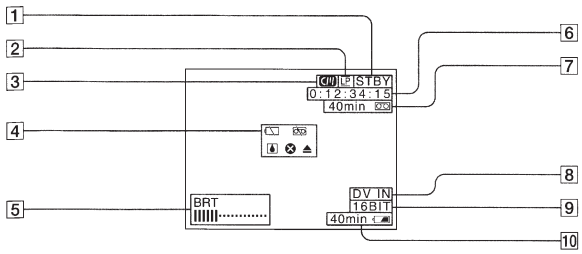

1 Tape transport mode indicator

2 Recording mode indicator (p. 10)

3 Cassette Memory indicator (p. 4)

4 Warning indicator (p. 86)

5 BRT (bright) indicator (p. 9)/VOL (volume) indicator (p. 9)

6 Time code indicator / Self-diagnosis display (p. 74)

7 Remaining tape indicator

8 DV IN indicator (p. 31)

9 Audio mode indicator (p. 58)

10 Remaining battery indicator (p. 63)/ Remaining time in minutes indicator

1 Indicador de modo de transporte de cinta

2 Indicador de modo de grabación (p. 10)

3 Indicador de memoria en cassette (p. 4)

4 Indicador de aviso (p. 86)

5 Indicador BRT (brillo) (p. 9)/VOL (volumen) (p. 9)

6 Indicador de código de tiempos / autodiagnóstico (p. 74)

7 Indicador de cinta restante

8 Indicador DV IN (p. 31)

9 Indicador de modo de audio (p. 58)

10 Indicador de batería restante (p. 63)/ tiempo restante en minutos

Warning indicators

If the CAUTION lamp and the indicators on the LCD screen flash, check the following:
If the CAUTION lamp flashes, but no indicators appear on the LCD screen, contact your Sony dealer or local authorized Sony facility.
♪: you can hear the beep sound when BEEP is set to ON in the menu system.

Indicadores de aviso

Si el indicador CAUTION y los indicadores de la pantalla LCD parpadean, compruebe lo siguiente:
Si el indicador CAUTION parpadea, pero no aparece ningún indicador en la pantalla LCD, póngase en contacto con el proveedor Sony o con un centro de servicio técnico local autorizado Sony.
♪: Es posible oír pitidos si BEEP está ajustado en ON en el sistema de menús.

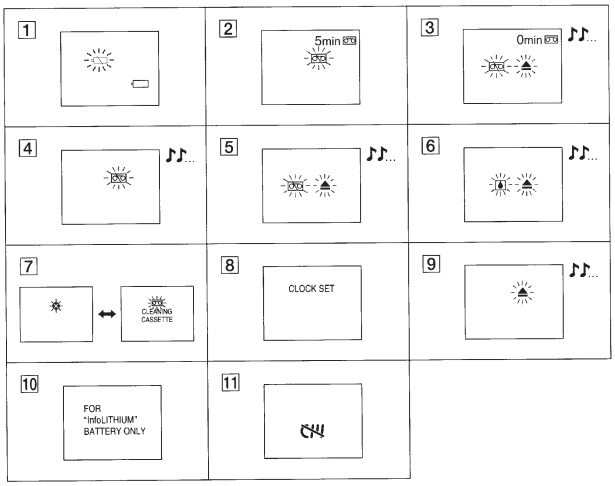

1 The battery is weak or dead.
Slow flashing: The battery is weak.
Fast flashing: The battery is dead.
Depending on conditions, the indicator may flash, even if there are 5 to 10 minutes remaining.

2 The tape is near the end.
The flashing is slow.

3 The tape has run out.
The flashing becomes rapid.

1 El paquete de batería tiene poca energía o está agotado.
Parpadeo lento: El paquete tiene poca energía.
Parpadea rápido: El paquete está agotado.
Dependiendo de las condiciones, el indicador puede parpadear aunque el tiempo restante sea de 5 a 10 minutos.

2 La cinta se encuentra cerca del final.
El parpadeo es lento.

3 La cinta ha llegado al final.
El parpadeo es rápido.

Warning indicators

Indicadores de aviso

4 No tape has been inserted.

5 The tab on the tape is out (red).

6 Moisture condensation has occurred. (p. 65)

7 The video heads may be contaminated. (p. 66)

8 The clock is not set.
When this message appears though you set the date and time, the vanadium-lithium battery is discharged. Charge the vanadium-lithium battery. (p. 60)

9 Some other trouble has occurred.
Disconnect the power source and contact your Sony dealer or local authorized facility.

10 The battery is not the "InfoLITHIUM" type.

11 The tape has no cassette memory. (p. 4)

4 No ha insertado ninguna cinta.

5 La lengüeta de la cinta está fuera (roja).

6 Se ha condensado humedad. (p. 65)

7 Es posible que los cabezales de vídeo estén sucios. (p. 66)

8 No ha ajustado el reloj.
Si este mensaje aparece aunque haya ajustado la fecha y la hora, significa que la pila de vanadio-litio está descargada. Cárguela. (p. 60)

9 Se ha producido algún problema.
Desconecte la fuente de alimentación y póngase en contacto con un proveedor Sony o con un centro de servicio técnico local autorizado.

10 El paquete de batería no es del tipo "InfoLITHIUM".

11 La cinta no dispone de memoria en cassette. (p. 4)

SECTION 2
DISASSEMBLY

NOTE: Follow the disassembly procedure in the numerical order given.

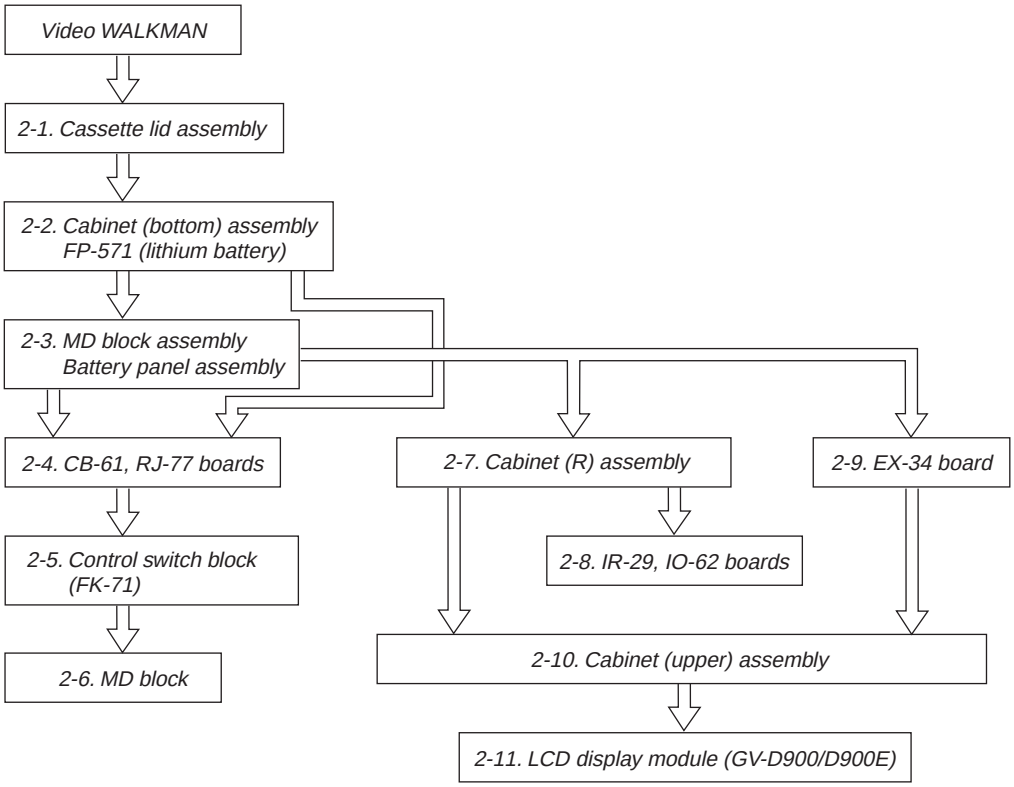

2-1. CASSETTE LID ASSEMBLY

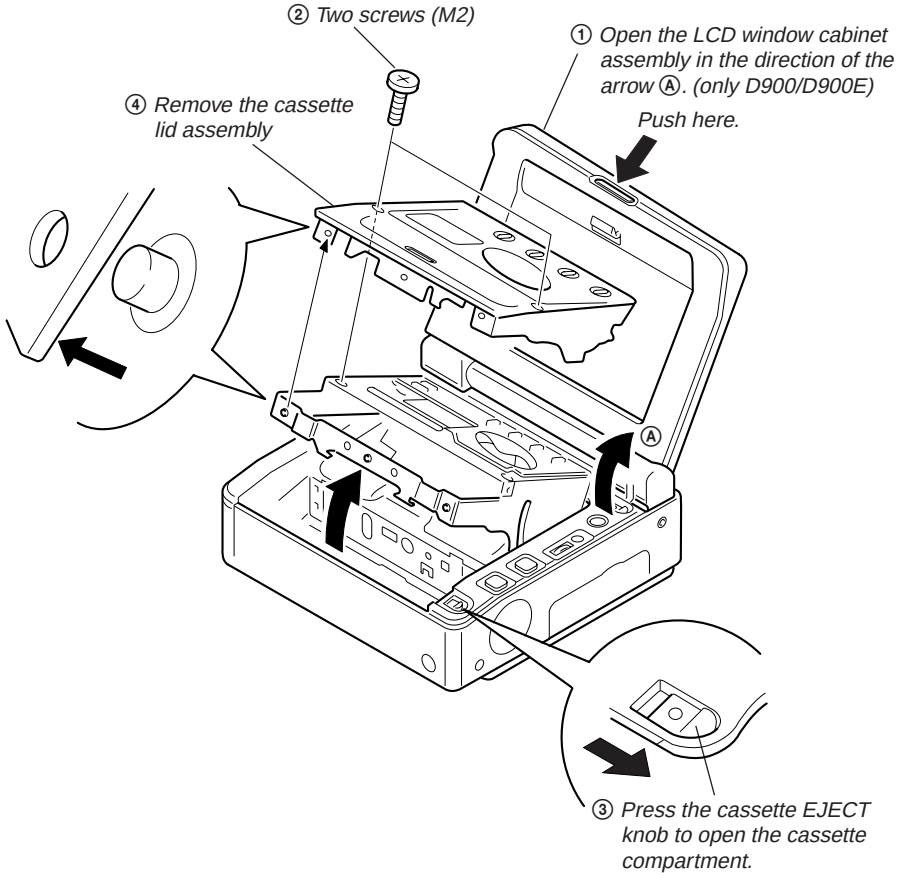
② Two screws (M2)
① Open the LCD window cabinet assembly in the direction of the arrow Ⓐ. (only D900/D900E)
Push here.
④ Remove the cassette lid assembly
Ⓐ
③ Press the cassette EJECT knob to open the cassette compartment.

2-2. CABINET (BOTTOM) ASSEMBLY, FP-571(LITHIUM BATTERY)

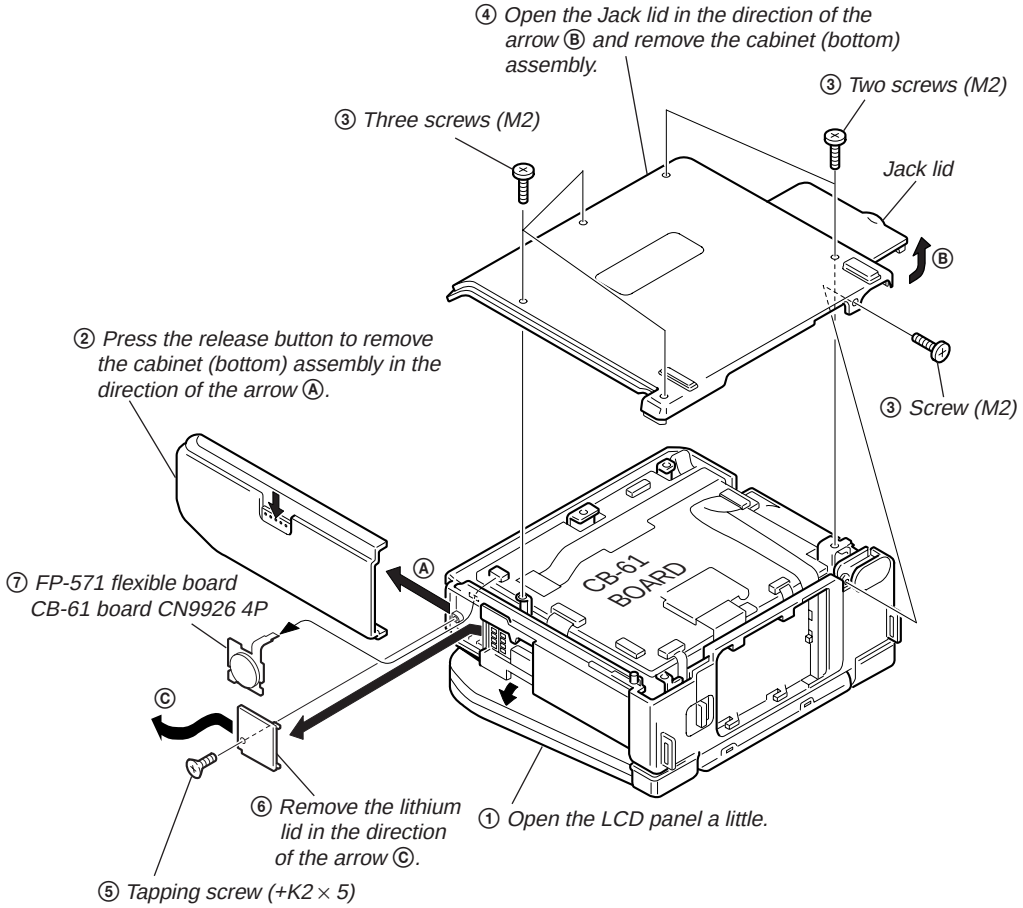
④ Open the Jack lid in the direction of the arrow Ⓑ and remove the cabinet (bottom) assembly.
③ Two screws (M2)
③ Three screws (M2)
Jack lid
Ⓑ
② Press the release button to remove the cabinet (bottom) assembly in the direction of the arrow Ⓐ.
③ Screw (M2)
Ⓐ
CB-61 BOARD
⑦ FP-571 flexible board
CB-61 board CN9926 4P
Ⓒ
⑥ Remove the lithium lid in the direction of the arrow Ⓒ.
① Open the LCD panel a little.
⑤ Tapping screw (+K2 × 5)

2-3. MD BLOCK ASSEMBLY, BATTERY PANEL ASSEMBLY

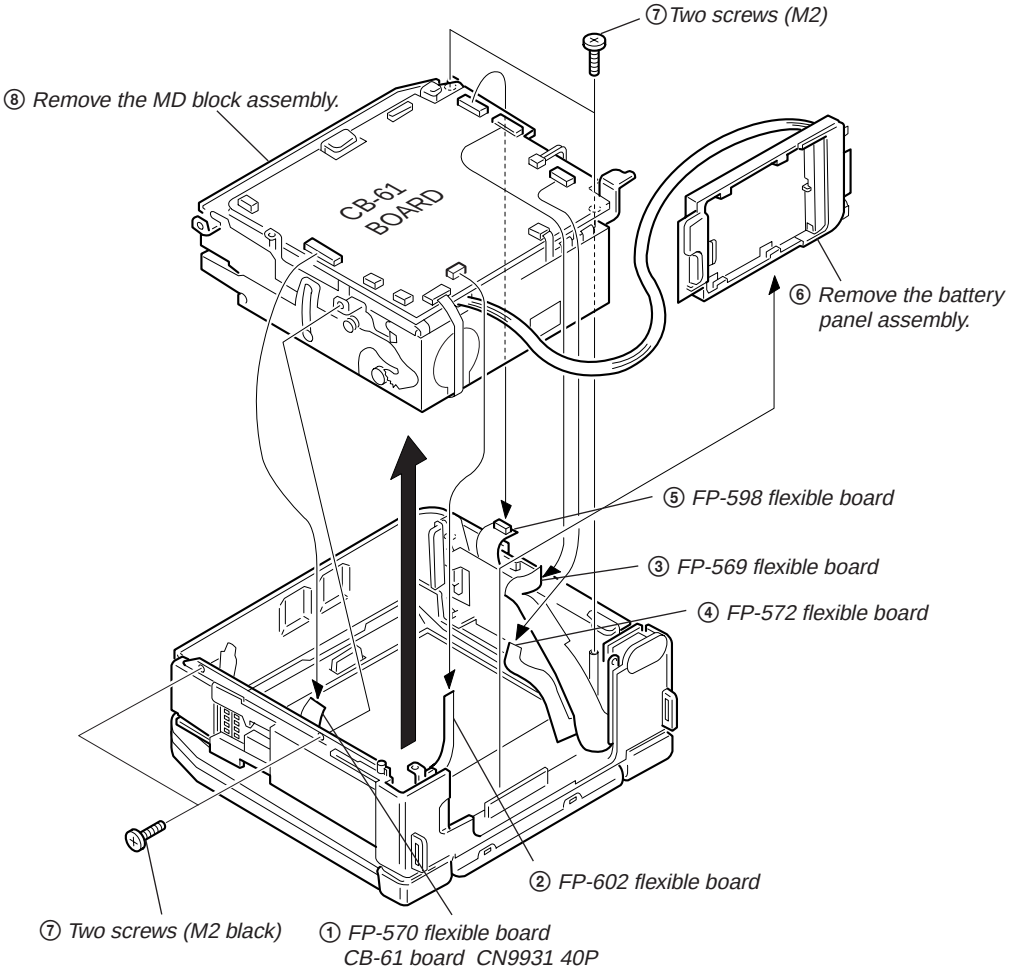
⑦ Two screws (M2)
⑧ Remove the MD block assembly.
CB-61 BOARD
⑥ Remove the battery panel assembly.
⑤ FP-598 flexible board
③ FP-569 flexible board
④ FP-572 flexible board
② FP-602 flexible board
⑦ Two screws (M2 black)
① FP-570 flexible board
CB-61 board CN9931 40P

2-4. CB-61, RJ-77 BOARDS

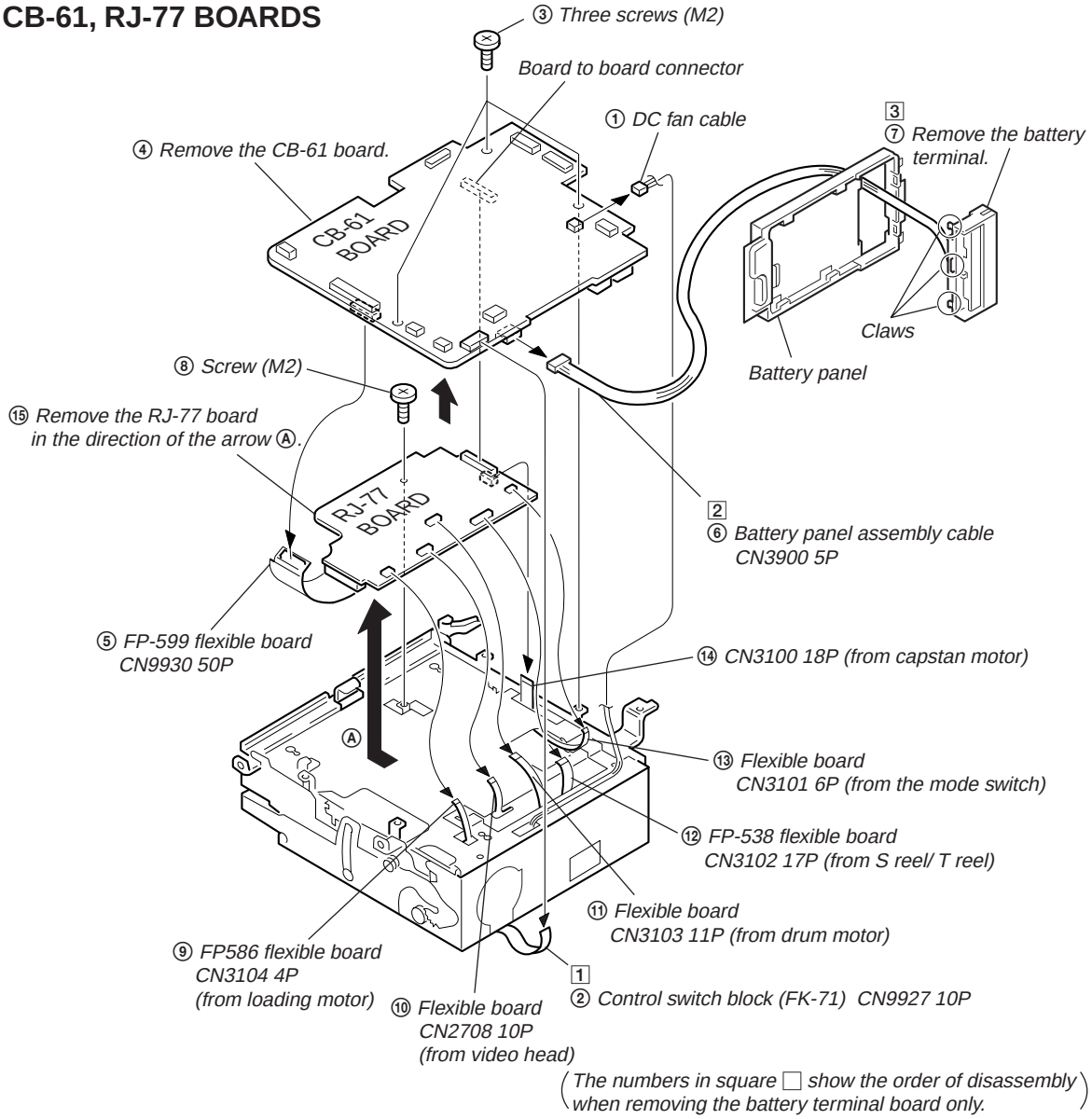
③ Three screws (M2)
Board to board connector
① DC fan cable
④ Remove the CB-61 board.
CB-61 BOARD
3
⑦ Remove the battery terminal.
Claws
Battery panel
⑧ Screw (M2)
⑮ Remove the RJ-77 board in the direction of the arrow Ⓐ.
RJ-77 BOARD
2
⑥ Battery panel assembly cable CN3900 5P
⑤ FP-599 flexible board CN9930 50P
⑭ CN3100 18P (from capstan motor)
Ⓐ
⑬ Flexible board CN3101 6P (from the mode switch)
⑫ FP-538 flexible board CN3102 17P (from S reel/ T reel)
⑪ Flexible board CN3103 11P (from drum motor)
⑨ FP586 flexible board CN3104 4P (from loading motor)
⑩ Flexible board CN2708 10P (from video head)
1
② Control switch block (FK-71) CN9927 10P
(The numbers in square □ show the order of disassembly when removing the battery terminal board only.)

2-5. CONTROL SWITCH BLOCK (FK-71)

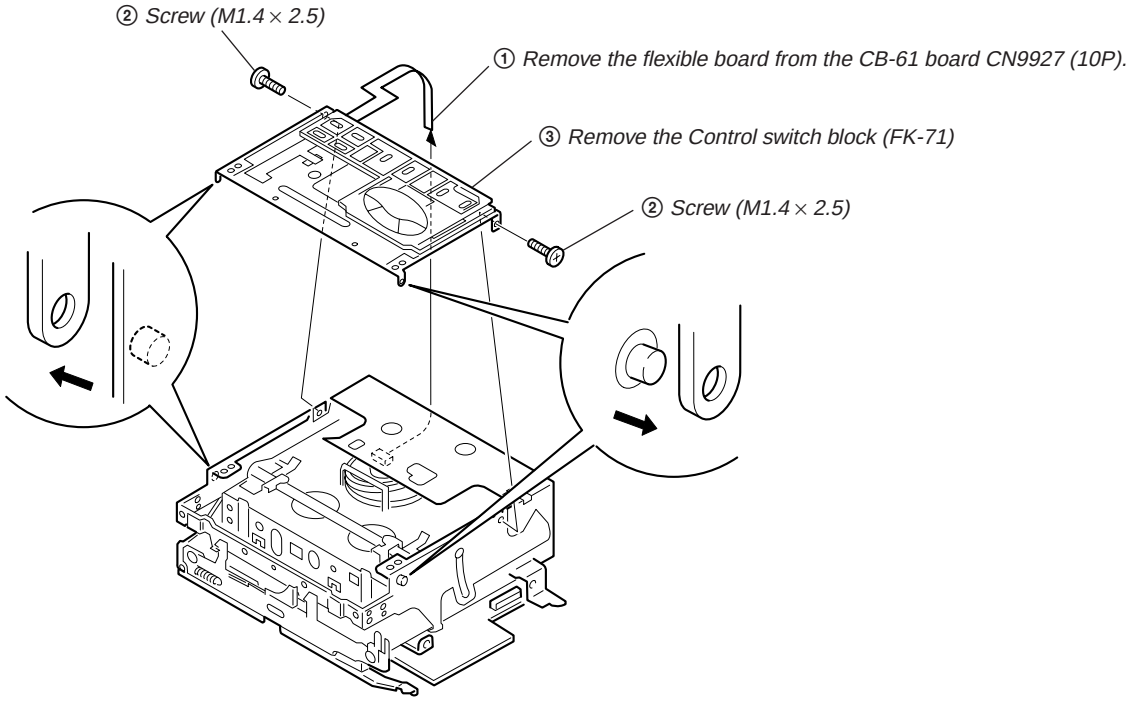
② Screw (M1.4 × 2.5)
① Remove the flexible board from the CB-61 board CN9927 (10P).
③ Remove the Control switch block (FK-71)
② Screw (M1.4 × 2.5)

2-6. MD BLOCK

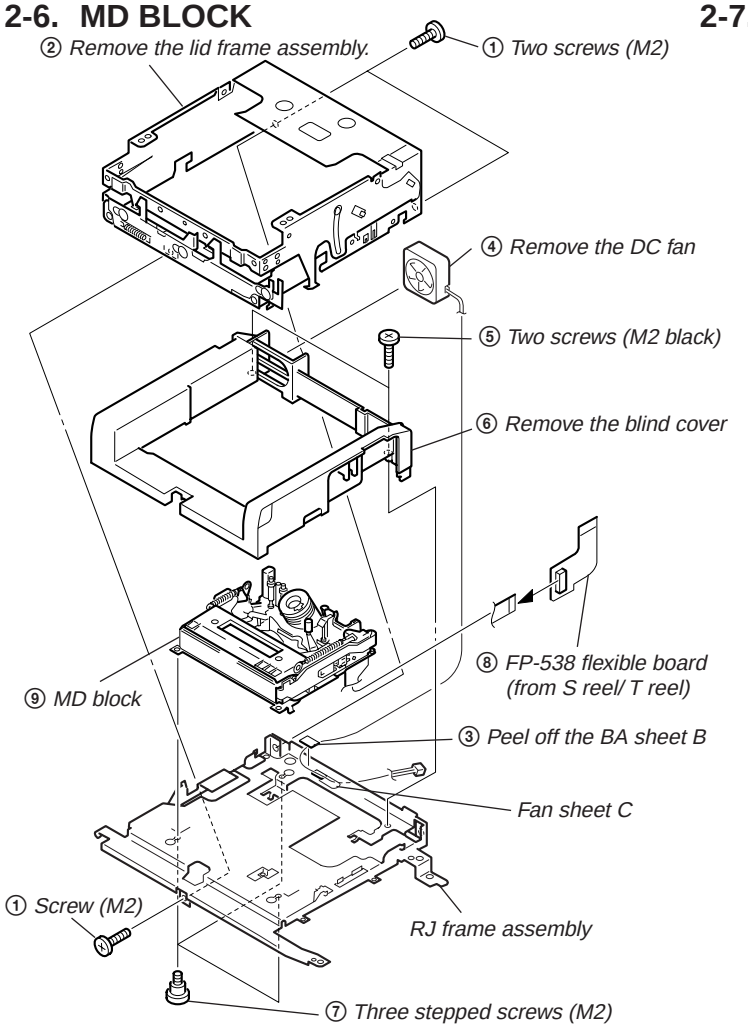
② Remove the lid frame assembly.
① Two screws (M2)
④ Remove the DC fan
⑤ Two screws (M2 black)
⑥ Remove the blind cover
⑧ FP-538 flexible board (from S reel/ T reel)
⑨ MD block
③ Peel off the BA sheet B
Fan sheet C
① Screw (M2)
RJ frame assembly
⑦ Three stepped screws (M2)

2-7. CABINET (R) ASSEMBLY

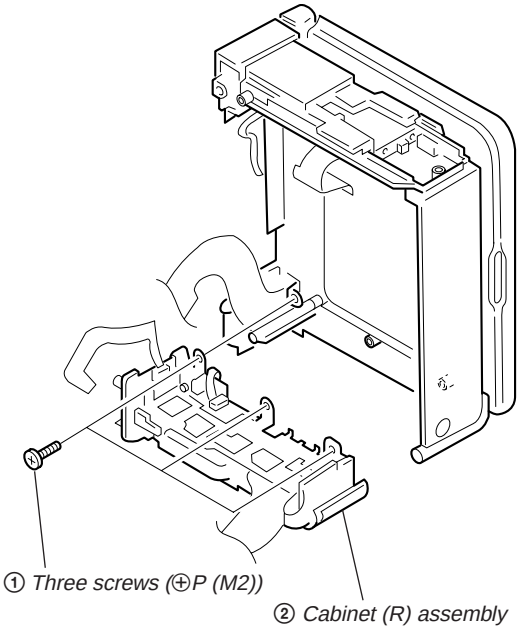

2-8. IR-29, IO-62 BOARDS

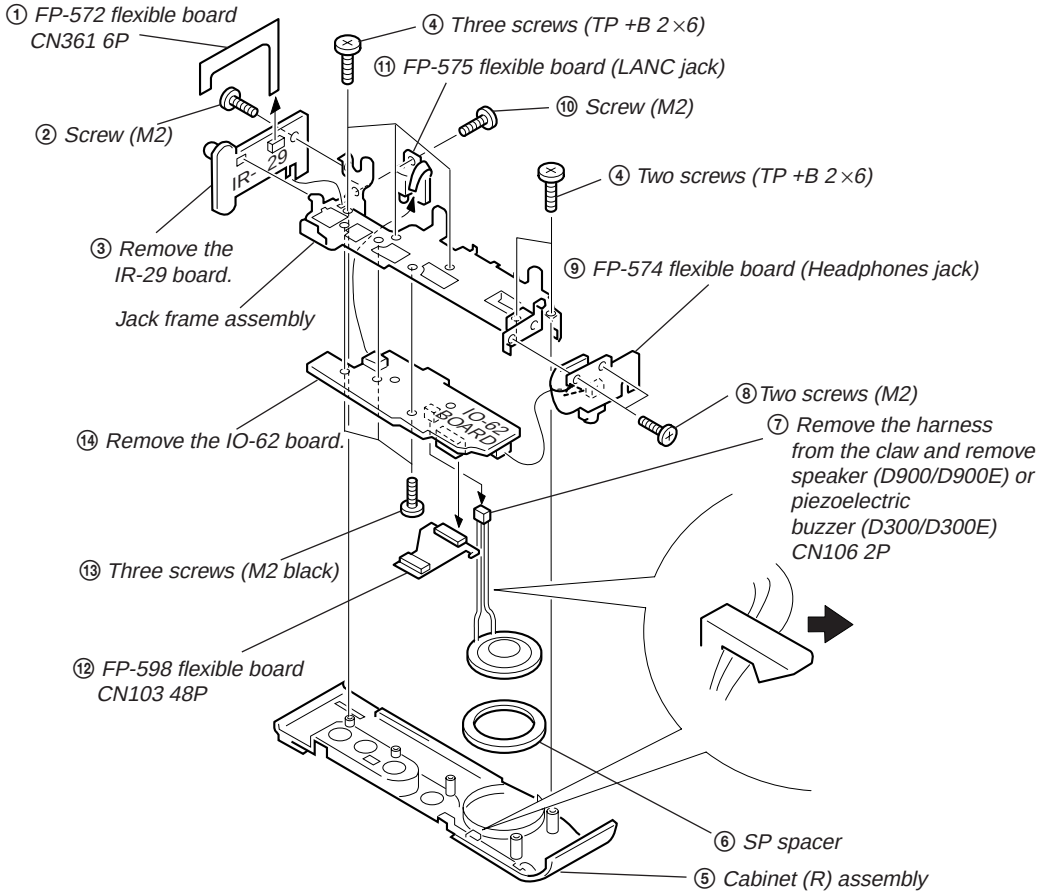
① FP-572 flexible board CN361 6P
④ Three screws (TP +B 2×6)
⑪ FP-575 flexible board (LANC jack)
② Screw (M2)
⑩ Screw (M2)
④ Two screws (TP +B 2×6)
IR-29
③ Remove the IR-29 board.
⑨ FP-574 flexible board (Headphones jack)
Jack frame assembly
⑧ Two screws (M2)
IO-62 BOARD
⑭ Remove the IO-62 board.
⑦ Remove the harness from the claw and remove speaker (D900/D900E) or piezoelectric buzzer (D300/D300E) CN106 2P
⑬ Three screws (M2 black)
⑫ FP-598 flexible board CN103 48P
⑥ SP spacer
⑤ Cabinet (R) assembly

2-9. EX-34 BOARD

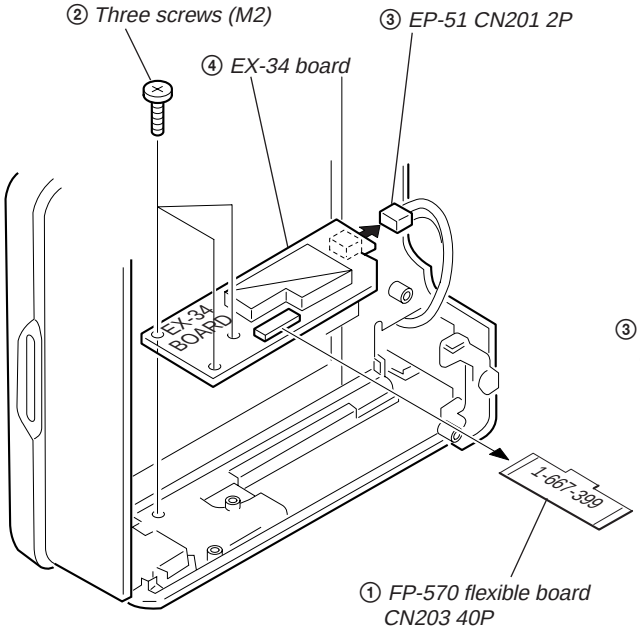

2-10. CABINET (UPPER) ASSEMBLY

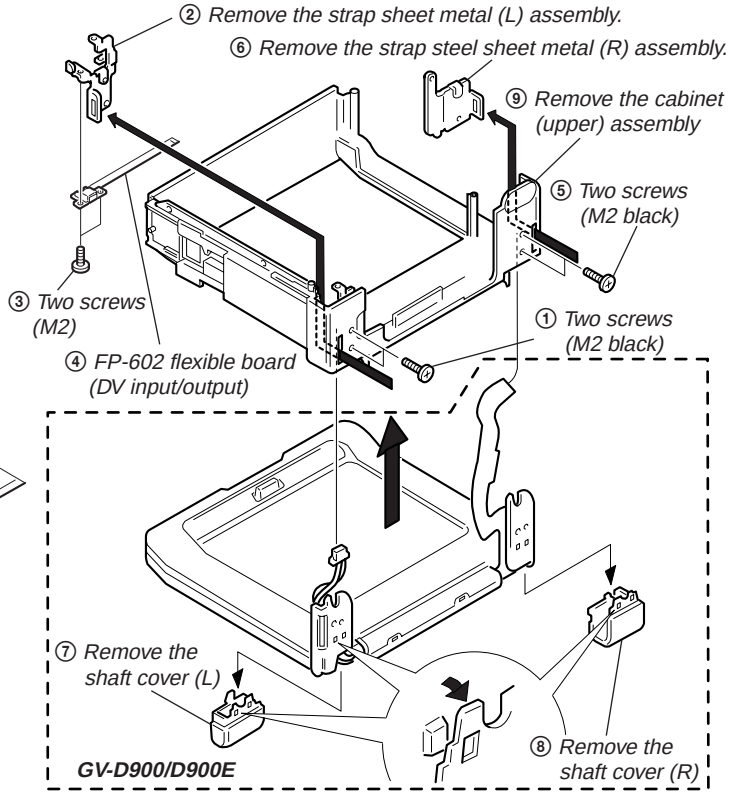
② Remove the strap sheet metal (L) assembly.
⑥ Remove the strap steel sheet metal (R) assembly.
⑨ Remove the cabinet (upper) assembly
⑤ Two screws (M2 black)
③ Two screws (M2)
① Two screws (M2 black)
④ FP-602 flexible board (DV input/output)
⑦ Remove the shaft cover (L)
⑧ Remove the shaft cover (R)
GV-D900/D900E

2-11. LCD DISPLAY MODULE (GV-D900/D900E)

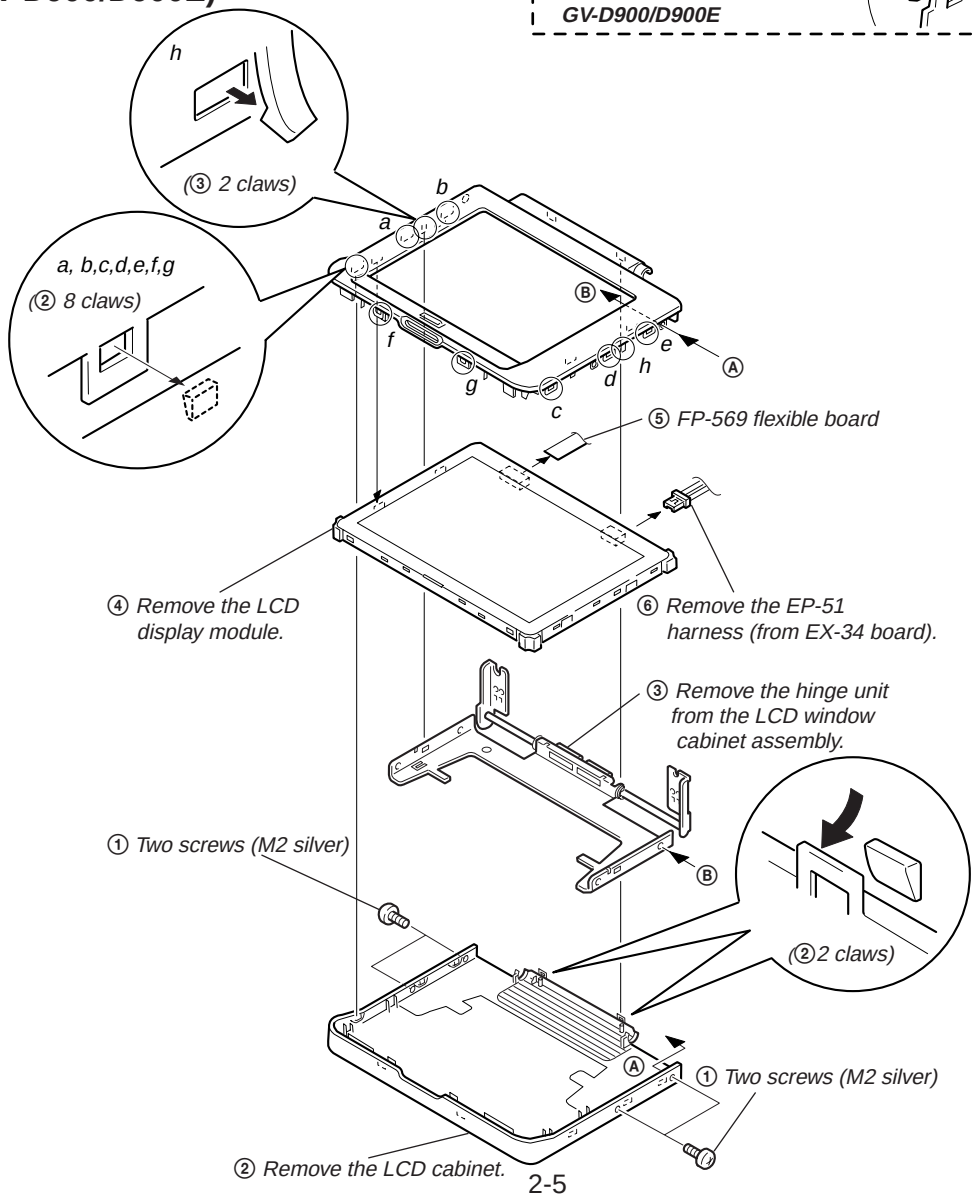

2-12. CIRCUIT BOARDS LOCATION

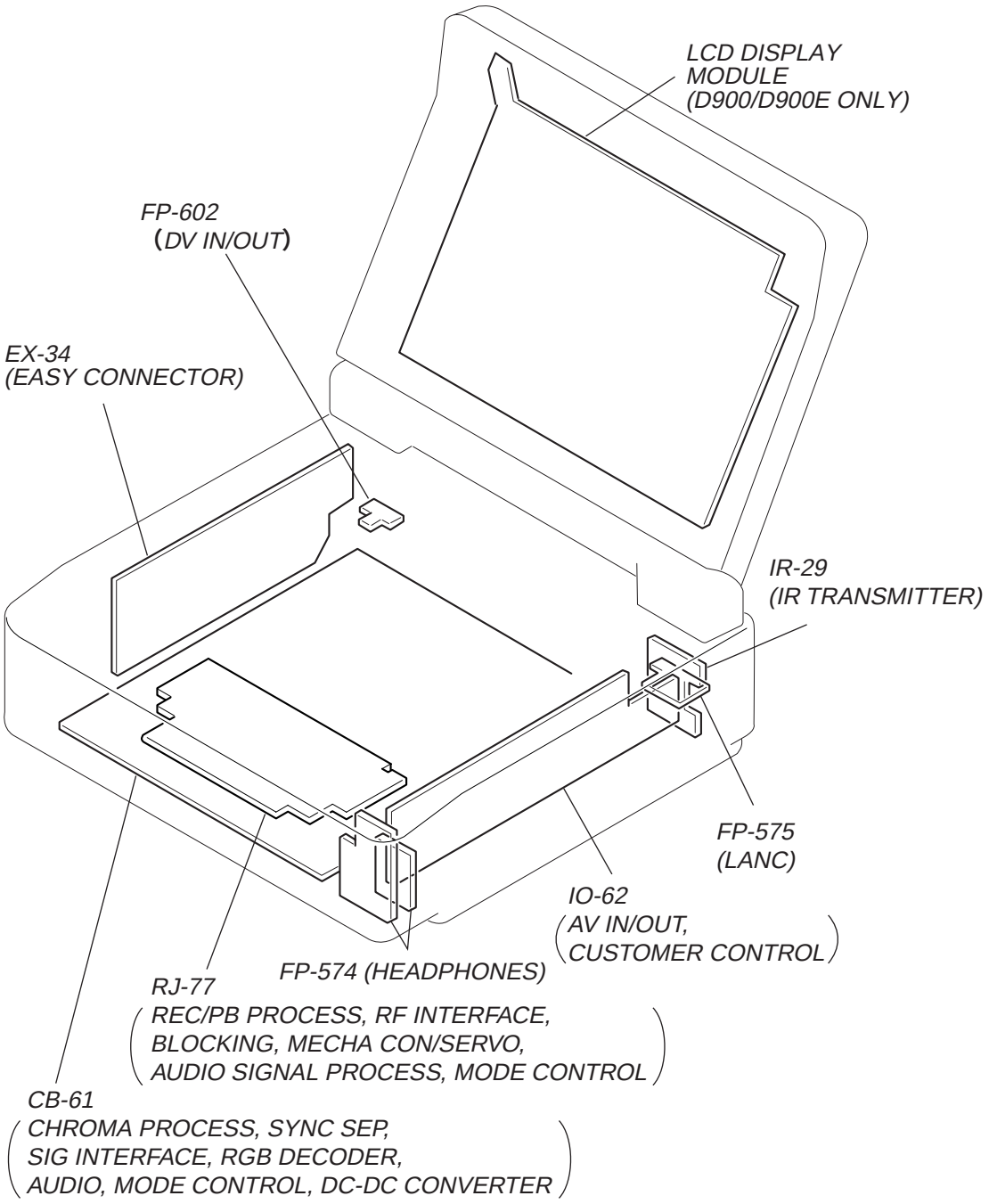

SECTION 3
BLOCK DIAGRAMS

3-1. OVERALL BLOCK DIAGRAM (1)

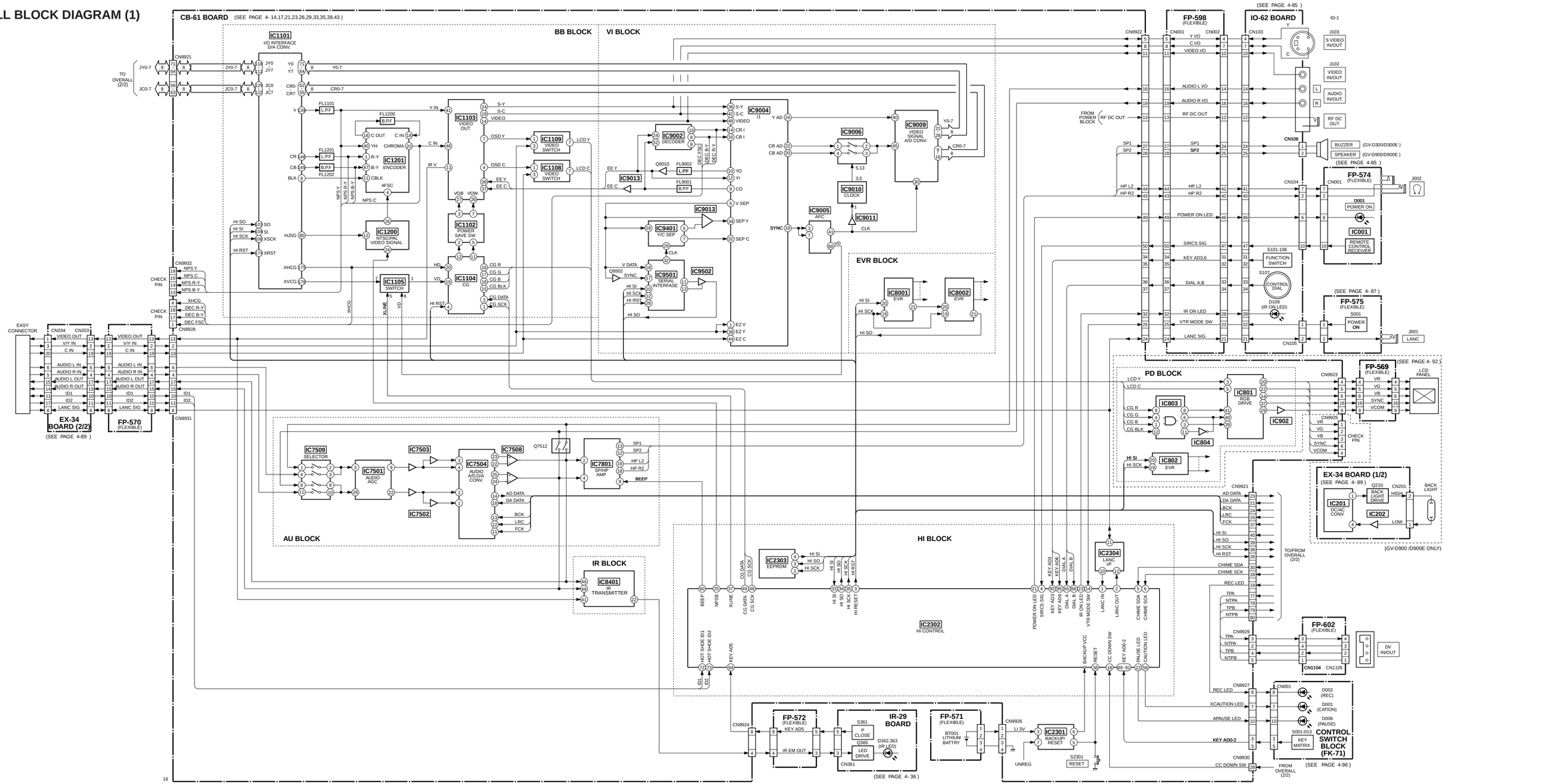

3-2. OVERALL BLOCK DIAGRAM (2)

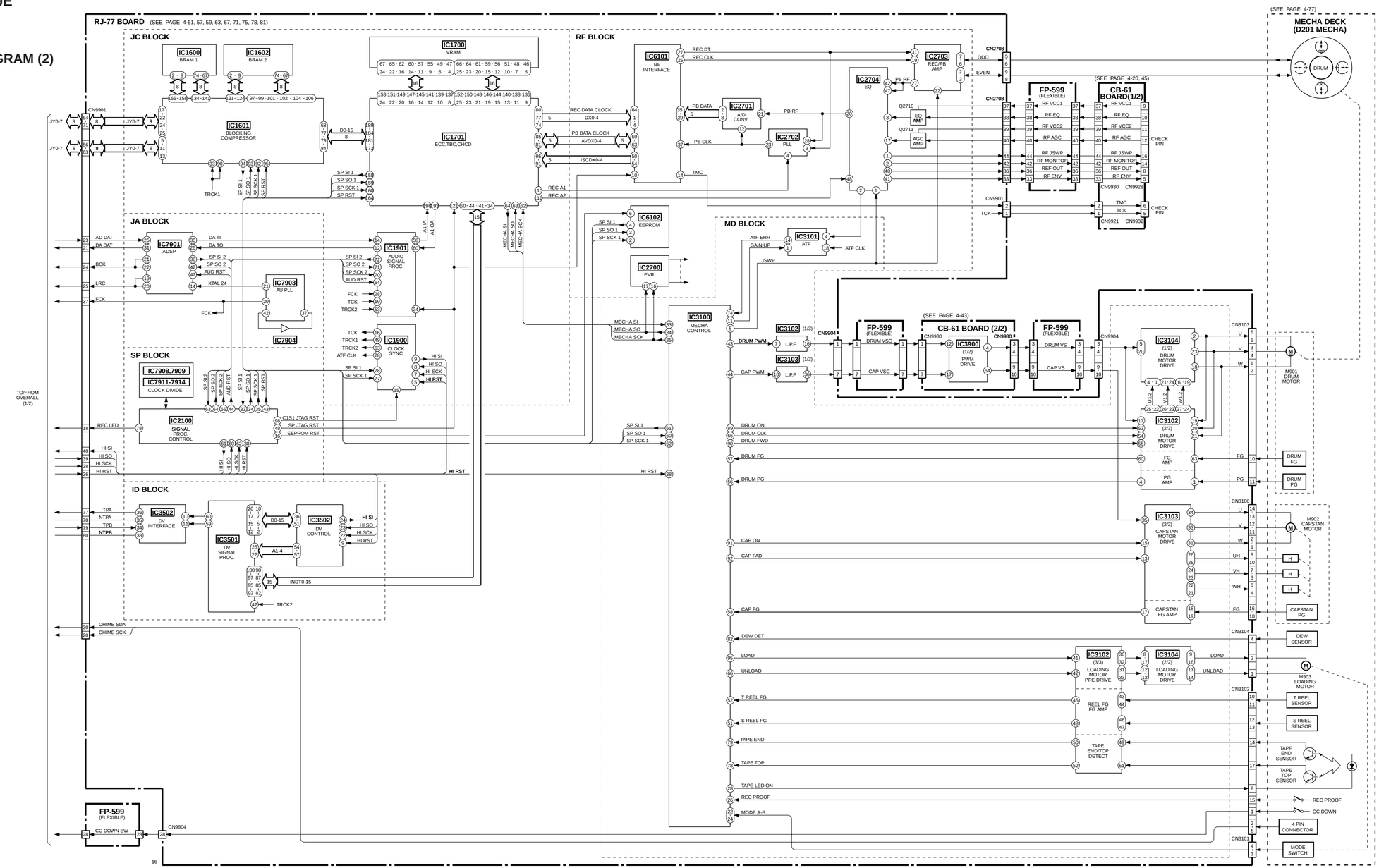

3-3. POWER BLOCK DIAGRAM

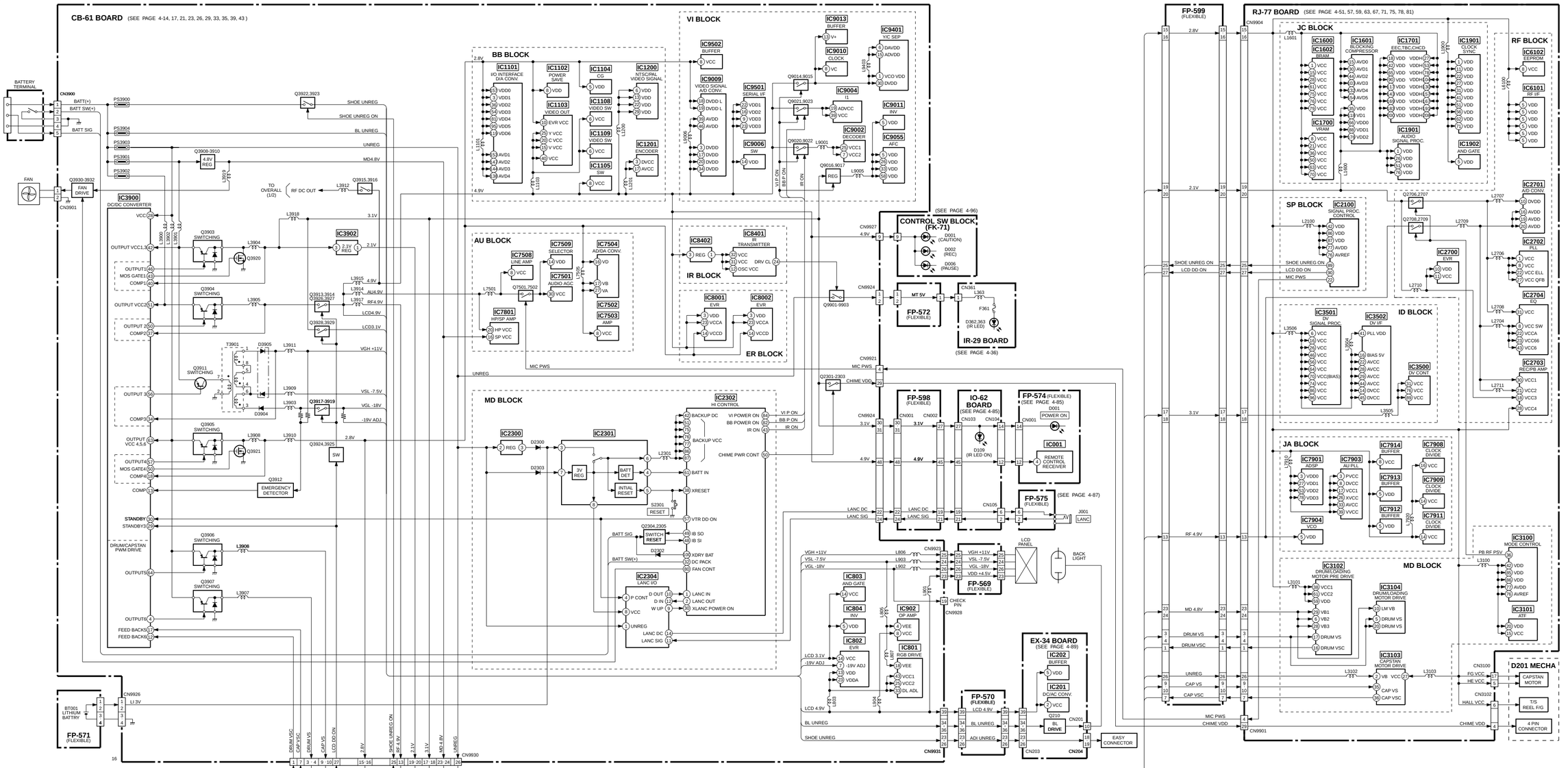

4-1. FRAME SCHEMATIC DIAGRAM

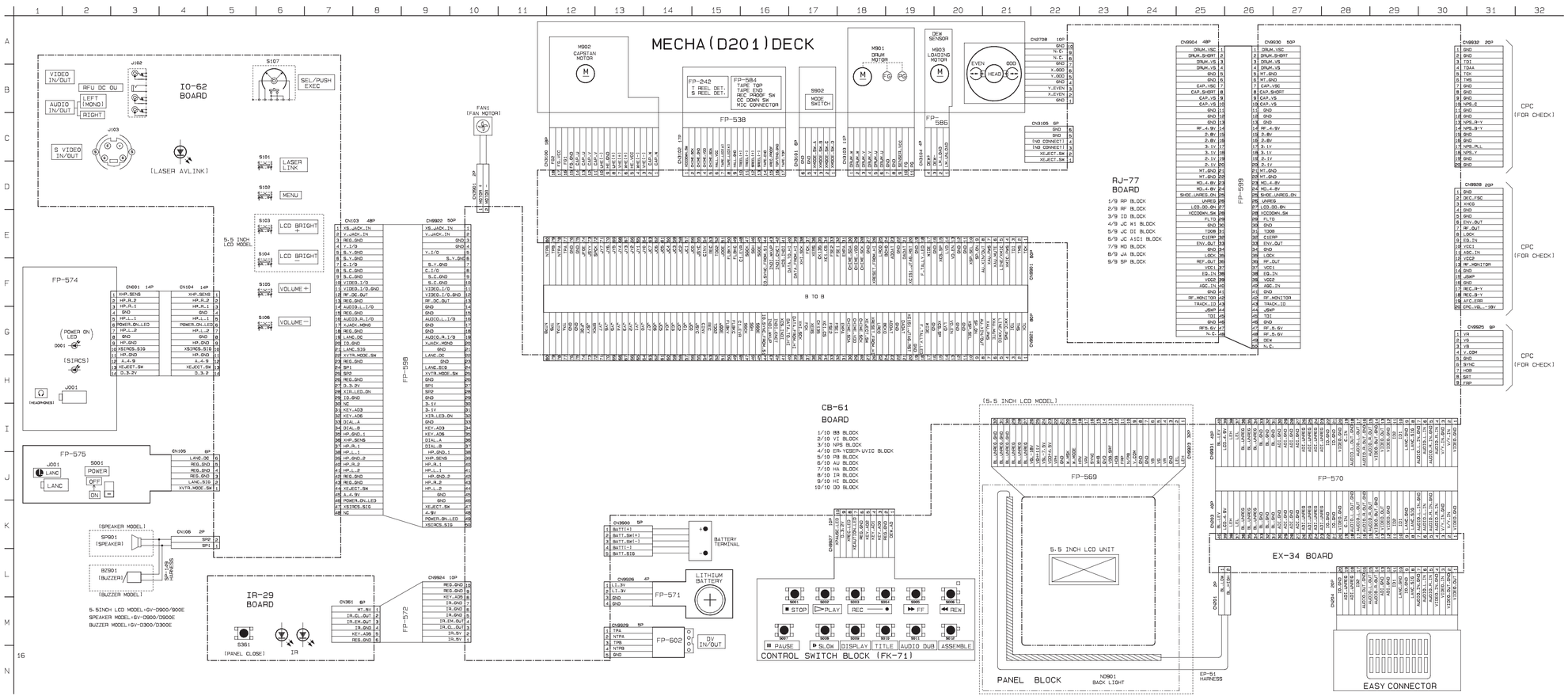

4-2. PRINTED WIRING BOARDS AND SCHEMATIC DIAGRAMS

THIS NOTE IS COMMON FOR WIRING BOARDS AND SCHEMATIC DIAGRAMS
(In addition to this, the necessary note is printed in each block)

(For printed wiring boards)

- ▒▒▒: Pattern from the side which enables seeing. (The other layers' patterns are not indicated.)
- Through hole is omitted.
- Circled numbers refer to waveforms.
- There are few cases that the part printed on diagram isn't mounted in this model.
- Chip parts.

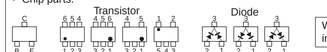

(For schematic diagrams)

- All capacitors are in μF unless otherwise noted. pF : μμF. 50V or less are not indicated except for electrolytics and tantalums.
- Chip resistors are 1/10W unless otherwise noted. kΩ=1000Ω, MΩ=1000kΩ.
- Caution when replacing chip parts. New parts must be attached after removal of chip. Be careful not to heat the minus side of tantalum capacitor, Because it is damaged by the heat.
- Some chip part will be indicated as follows.

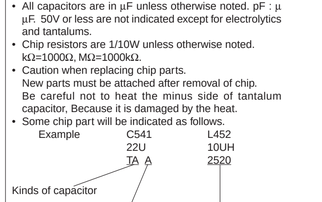

- Constants of resistors, capacitors, ICs and etc with XX indicate that they are not used. In such cases, the unused circuits may be indicated.
- Parts with ★ differ according to the model/destination. Refer to the mount table for each function.
- All variable and adjustable resistors have characteristic curve B, unless otherwise noted.
- Signal name
  XEDIT → EDIT PB/XREC → PB/$\overline{\text{REC}}$
- : non flammable resistor
- : fusible resistor
- : panel designation
- : B+ Line *
- : B– Line *
- : IN/OUT direction of (+,–) B LINE. *
- : adjustment for repair. *
- Circled numbers refer to waveforms. *
- * Indicated by the color red.

(Measuring conditions voltage and waveform)

- Voltages and waveforms are measured between the measurement points and ground when composite video signal is REC or PB. They are reference values and reference waveforms. *
  (VOM of DC 10 MΩ input impedance is used.).
- Voltage values change depending upon input impedance of VOM used.)

When indicating parts by reference number, pleas include the board name.

Note : Les composants identifiés par une marque ⚠ sont critiques pour la sécurité. Ne les remplacer que par une pièce portant le numéro spécifie.

Note : The components identified by mark ⚠ or dotted line with mark ⚠ are critical for safety. Replace only with part number specified.

CB-61 BOARD (SIDE A)

C1101	C-5	C3948	H-5	C9043	C-8	IC8100	B-7	Q3935	D-8	R1127	B-4	R1274	F-3	R8423	A-4	R9129	D-8
C1102	D-6	C3949	G-5	C9045	B-9	IC8200	B-8	Q8401	A-4	R1128	D-5	R1275	F-3	R8424	A-4	R9130	D-8
C1103	D-6	C3950	F-5	C9047	D-9	IC8401	A-5	Q8402	A-4	R1129	B-4	R1276	G-4	R8425	A-4	R9131	D-7
C1104	D-6	C3951	F-5	C9048	D-9	IC8402	E-6	Q8403	A-4	R1130	E-7	R1277	F-4	R8426	A-4	R9132	E-7
C1105	D-6	C3954	H-9	C9049	C-8	IC9004	C-8	Q8404	A-4	R1131	D-5	R1278	F-4	R8427	A-4	R9150	A-6
C1106	D-6	C3956	C-1	C9052	D-8	IC9005	B-6	Q9001	A-9	R1132	C-5	R1279	F-4	R8428	A-4	R9151	A-6
C1107	D-6	C3961	H-5	C9054	C-9	IC9006	C-8	Q9002	C-15	R1133	B-5	R1280	G-4	R8429	A-5		
C1108	D-6	C3962	H-5	C9055	C-8	IC9009	D-7	Q9003	A-9	R1134	C-4	R1281	G-4	R8430	B-5	S2302	B-2
C1109	D-6	C3963	G-5	C9056	C-8	IC9010	C-7	Q9004	C-9	R1135	C-4	R1282	G-3	R8431	A-5		
C1110	C-4	C3964	H-5	C9057	C-8	IC9011	C-7	Q9005	B-15	R1136	C-4	R1283	F-3	R8432	B-5	T3901	H-6
C1111	C-6	C3968	F-9	C9058	D-8	IC9013	B-9	Q9006	B-17	R1137	B-5	R1284	G-4	R8433	A-5		
C1113	D-4	C3970	E-8	C9059	C-8			Q9007	B-9	R1138	B-5	R1285	G-4	R8434	A-4		
C1114	D-4	C3971	E-8	C9061	D-8	L803	D-1	Q9008	B-16	R1139	C-4	R1286	G-3	R8435	A-4		
C1115	D-4	C3972	E-8	C9062	C-8	L804	C-2	Q9009	B-17	R1141	C-4	R1287	G-3	R8439	E-6		
C1116	D-4	C3973	D-8	C9063	B-6	L805	E-2	Q9010	B-8	R1142	B-4	R1288	F-3	R8440	E-6		
C1117	D-5	C8001	C-8	C9064	B-5	L806	D-1	Q9011	B-6	R1143	C-4	R1289	G-3	R9004	B-9		
C1118	C-5	C8002	C-7	C9065	C-8	L807	D-2	Q9012	C-6	R1144	B-5	R1290	F-3	R9005	A-9		
C1119	D-4	C803	D-1	C9066	C-8	L901	D-1	Q9013	C-7	R1145	C-4	R1291	F-3	R9008	B-9		
C1120	D-5	C804	D-2	C9067	D-8	L902	D-1	Q9014	D-8	R1146	C-4	R1292	F-3	R9013	B-9		
C1121	D-4	C805	C-1	C9068	D-8	L903	D-1	Q9015	D-8	R1149	B-8	R3932	G-5	R9014	A-9		
C1122	D-4	C807	D-1	C9069	D-8	L904	E-2	Q9016	B-7	R1152	D-6	R3936	G-5	R9018	B-9		
C1123	C-5	C808	E-1	C9070	D-8	L1101	D-6	Q9017	B-7	R1153	D-6	R3937	F-10	R9019	A-9		
C1124	D-7	C812	D-1	C9071	C-7	L1103	C-5	Q9020	E-8	R1154	D-5	R3938	F-10	R9020	C-7		
C1125	C-5	C814	D-1	C9072	B-6	L1201	F-5	Q9021	E-7	R1158	D-5	R3939	F-10	R9021	B-9		
C1126	C-5	C815	D-1	C9073	B-6	L3900	G-8	Q9022	E-8	R1159	B-4	R3940	G-5	R9022	B-9		
C1127	D-5	C818	C-2	C9074	C-8	L3901	H-8	Q9023	D-7	R1160	C-4	R3942	G-5	R9024	B-9		
C1130	C-4	C819	D-2	C9075	C-8	L3902	G-8	Q9024	C-7	R1161	B-4	R3943	G-6	R9025	B-9		
C1131	C-4	C821	C-2	C9077	B-6	L3903	G-6			R1162	B-4	R3944	G-9	R9031	C-9		
C1132	C-4	C822	E-2	C9078	B-5	L3904	H-8	R802	E-2	R1163	B-4	R3945	G-9	R9036	B-9		
C1134	C-4	C825	C-2	C9079	B-6	L3905	G-7	R810	D-2	R1166	C-5	R3946	G-9	R9038	B-9		
C1135	C-5	C826	C-2	C908	C-1	L3906	H-6	R811	D-2	R1167	D-7	R3947	G-9	R9039	B-9		
C1136	C-4	C827	C-2	C9080	B-6	L3907	G-6	R812	C-2	R1170	D-5	R3948	G-9	R9046	B-9		
C1137	C-5	C832	D-2	C9081	B-6	L3908	H-7	R813	D-2	R1171	D-6	R3949	G-6	R9047	B-8		
C1138	C-4	C833	E-2	C9082	D-8	L3909	G-5	R814	C-2	R1172	D-5	R3950	G-5	R9049	B-9		
C1139	B-4	C834	D-2	C9084	B-5	L3910	H-5	R815	D-2	R1173	D-5	R3951	G-9	R9050	D-9		
C1140	D-4	C838	D-2	C9085	B-5	L3911	G-6	R818	D-2	R1175	E-5	R3952	G-9	R9056	C-9		
C1141	D-5	C8401	A-5	C9087	B-5	L3913	H-5	R819	C-1	R1176	D-5	R3953	G-6	R9057	D-9		
C1142	D-5	C8402	B-4	C9088	C-6	L3919	F-8	R821	D-1	R1177	E-5	R3954	G-5	R9058	C-8		
C1143	D-5	C8403	A-5	C9089	C-6	L3920	F-8	R822	C-2	R1178	E-5	R3962	G-5	R9059	D-8		
C1145	C-4	C8404	B-5	C909	C-1	L8402	B-4	R824	C-1	R1179	E-5	R3963	G-5	R9060	B-7		
C1146	C-4	C8405	A-5	C9090	C-5	L8403	B-4	R825	D-2	R1180	E-5	R3964	G-5	R9061	C-7		
C1147	B-4	C8406	A-5	C9091	B-7	L8404	B-4	R828	D-2	R1181	D-5	R3965	G-5	R9062	C-9		
C1153	D-4	C8407	A-4	C9092	D-7	L9005	B-7	R831	C-2	R1182	D-5	R3966	H-5	R9063	B-6		
C1154	D-3	C8408	B-5	C9093	D-7	L9006	D-7	R832	C-2	R1183	D-4	R3968	H-5	R9064	B-8		
C1155	D-3	C8409	A-5	C9096	C-7	L9008	B-5	R833	C-2	R1184	D-4	R3969	H-5	R9065	B-7		
C1156	D-4	C8410	A-5	C9098	D-7			R834	D-2	R1185	D-4	R3970	H-5	R9066	C-9		
C1157	D-4	C8411	A-5	C9099	C-7	LF9901	C-3	R835	C-2	R1186	D-4	R3979	H-5	R9067	C-9		
C1158	E-4	C8412	A-6	C9100	C-7	LF9902	C-3	R840	C-2	R1187	D-4	R3980	H-5	R9068	B-8		
C1159	D-5	C8413	A-5	C9101	D-6			R842	E-2	R1188	D-4	R3981	E-8	R9069	B-5		
C1160	D-6	C8414	B-5	C9102	B-5	PS3900	F-10	R843	E-2	R1189	E-4	R3982	E-8	R9070	B-6		
C1215	H-3	C8415	B-5	C9105	D-7	PS3901	G-10	R845	C-2	R1190	E-4	R3983	D-8	R9071	B-6		
C1216	H-3	C8416	A-5	C9106	D-8	PS3902	G-10	R846	D-2	R1191	D-5	R3984	D-8	R9072	B-6		
C1218	H-3	C8417	B-4	C9107	C-7	PS3903	G-10	R847	E-2	R1192	D-5	R3986	E-8	R9073	B-6		
C1219	H-3	C8418	A-4	C9108	C-9	PS3904	G-10	R850	C-2	R1193	C-7	R3989	H-6	R9074	C-9		
C1220	G-3	C8419	A-4	C923	D-1			R854	D-2	R1197	D-6	R3990	H-6	R9075	C-9		
C1222	G-3	C8420	A-4			Q805	C-2	R855	D-2	R1198	D-6	R3991	F-9	R9076	B-6		
C1223	G-4	C8421	A-4	CN3900	H-9	Q1101	C-5	R856	D-2	R1230	H-3	R3992	E-10	R9077	B-5		
C1224	G-3	C8422	A-5	CN9921	D-3	Q1102	B-5	R857	D-2	R1231	H-3	R3993	G-5	R9078	B-5		
C1225	G-5	C8423	A-4			Q1103	D-5	R858	D-2	R1232	H-3	R3994	E-9	R9079	D-8		
C1226	G-4	C8424	A-4	D801	C-2	Q1106	B-4	R859	E-2	R1233	G-3	R3995	E-9	R9080	C-8		
C1227	G-3	C8425	A-5	D802	D-2	Q1108	B-4	R860	D-2	R1235	G-3	R3996	E-9	R9081	C-8		
C1228	G-4	C8426	A-5	D3901	H-9	Q1109	B-4	R867	C-1	R1236	G-3	R3997	E-8	R9082	D-9		
C1229	G-4	C8427	A-4	D3902	H-9	Q1110	C-4	R874	C-1	R1237	G-2	R3998	E-8	R9083	B-6		
C1230	G-4	C8428	A-4	D3904	G-6	Q1111	B-4	R875	C-1	R1238	G-2	R8001	C-7	R9084	B-5		
C1232	H-4	C8429	A-4	D3905	G-5	Q1112	B-4	R929	D-1	R1239	G-3	R8002	C-7	R9085	D-9		
C1233	H-4	C8430	A-4	D3906	G-6	Q1113	B-4	R932	D-1	R1240	G-3	R8003	C-7	R9087	B-6		
C1234	H-4	C8431	B-4	D9001	B-5	Q1114	C-3	R933	D-2	R1241	G-3	R8004	C-7	R9088	B-6		
C1235	H-4	C8432	B-4	D9002	C-7	Q1201	G-4	R942	E-1	R1242	G-3	R8005	C-7	R9089	B-6		
C1236	H-4	C8433	A-4	F8801	D-1	Q1202	G-4	R943	E-1	R1243	G-4	R8007	C-7	R9090	B-5		
C1237	H-4	C8434	E-6	F8802	D-1	Q1203	H-4	R1102	D-5	R1244	G-4	R8008	C-8	R9091	C-6		
C1238	H-4	C844	D-1	F8803	C-1	Q1204	G-3	R1103	D-5	R1245	G-3	R8009	C-8	R9094	D-7		
C1239	H-4	C9003	B-9	F8804	D-1	Q1205	F-3	R1104	D-6	R1246	G-4	R8010	B-7	R9095	C-6		
C1240	H-3	C9004	B-10	FB1101	D-6	Q1206	G-4	R1105	C-6	R1247	G-4	R8401	A-5	R9096	C-6		
C1241	H-3	C9007	B-9	FB9001	D-7	Q1207	F-4	R1106	C-6	R1248	G-4	R8402	A-5	R9097	C-6		
C1242	H-3	C901	D-1			Q1208	F-4	R1107	C-5	R1249	H-3	R8403	A-5	R9098	C-6		
C1243	H-3	C9010	A-9	FL1101	C-5	Q1209	G-3	R1108	C-6	R1250	G-4	R8404	A-5	R9099	C-6		
C1244	H-4	C9012	B-9	FL1102	C-5	Q1210	H-4	R1109	D-6	R1251	G-4	R8405	A-5	R9100	C-6		
C1245	G-4	C9014	B-9	FL1200	H-2	Q1212	G-2	R1110	C-6	R1254	H-4	R8406	A-5	R9101	C-7		
C1246	F-3	C9017	C-9	FL1201	F-3	Q3908	G-9	R1111	C-6	R1255	H-4	R8407	A-5	R9102	C-7		
C1247	G-3	C902	E-2	FL1202	F-4	Q3909	G-9	R1112	C-6	R1256	H-4	R8408	A-4	R9103	C-7		
C1248	G-4	C9020	B-9	FL9001	B-9	Q3910	G-9	R1113	C-6	R1257	H-4	R8409	A-5	R9104	C-7		
C3900	H-10	C9025	C-9	FL9002	B-8	Q3912	G-5	R1114	C-5	R1258	G-3	R8410	A-5	R9105	C-7		
C3901	H-10	C9026	C-9	FL9003	A-9	Q3917	G-5	R1115	C-6	R1259	H-4	R8411	A-5	R9106	C-7		
C3907	F-10	C9027	C-9	FL9004	A-6	Q3918	G-5	R1116	C-5	R1262	H-3	R8412	A-5	R9107	C-7		
C3908	G-10	C9028	B-9			Q3919	G-5	R1117	D-5	R1263	H-3	R8413	A-4	R9108	C-7		
C3910	G-10	C903	E-2	IC803	E-2	Q3922	F-5	R1118	D-4	R1264	H-4	R8414	A-4	R9109	C-7		
C3912	G-10	C9030	D-9	IC804	E-2	Q3923	F-10	R1119	C-5	R1265	G-3	R8415	A-4	R9110	C-7		
C3916	F-10	C9031	C-9	IC902	E-2	Q3926	G-5	R1120	C-5	R1266	G-4	R8416	A-4	R9111	D-8		
C3934	F-10	C9032	C-9	IC1101	C-6	Q3927	G-5	R1121	B-5	R1267	G-4	R8417	A-4	R9112	D-8		
C3935	G-5	C9033	C-7	IC1103	C-4	Q3930	E-8	R1122	D-4	R1268	G-4	R8418	A-4	R9113	B-7		
C3936	G-6	C9035	C-9	IC1104	E-6	Q3931	E-8	R1123	C-4	R1270	H-4	R8419	A-4	R9114	B-7		
C3937	G-6	C9038	B-5	IC1108	D-4	Q3932	E-8	R1124	C-4	R1271	H-4	R8420	B-4	R9122	C-7		
C3941	G-9	C9038	B-8	IC1109	E-4	Q3933	E-8	R1125	D-5	R1272	H-3	R8421	A-6	R9127	C-6		
C3946	G-6	C904	D-1	IC1201	H-3	Q3934	D-8	R1126	C-4	R1273	G-3	R8422	A-4	R9128	C-7		

CB-61 (CHROMA PROCESS, SYNC SEP, SIG INTERFACE, RGB DECODER, AUDIO, MODE CONTROL, DC-DC CONVERTER) PRINTED WIRING BOARD
— Ref. No. CB-61 Board; 10,000 Series —

There are few cases that the part printed on this diagram isn't mounted in this model.

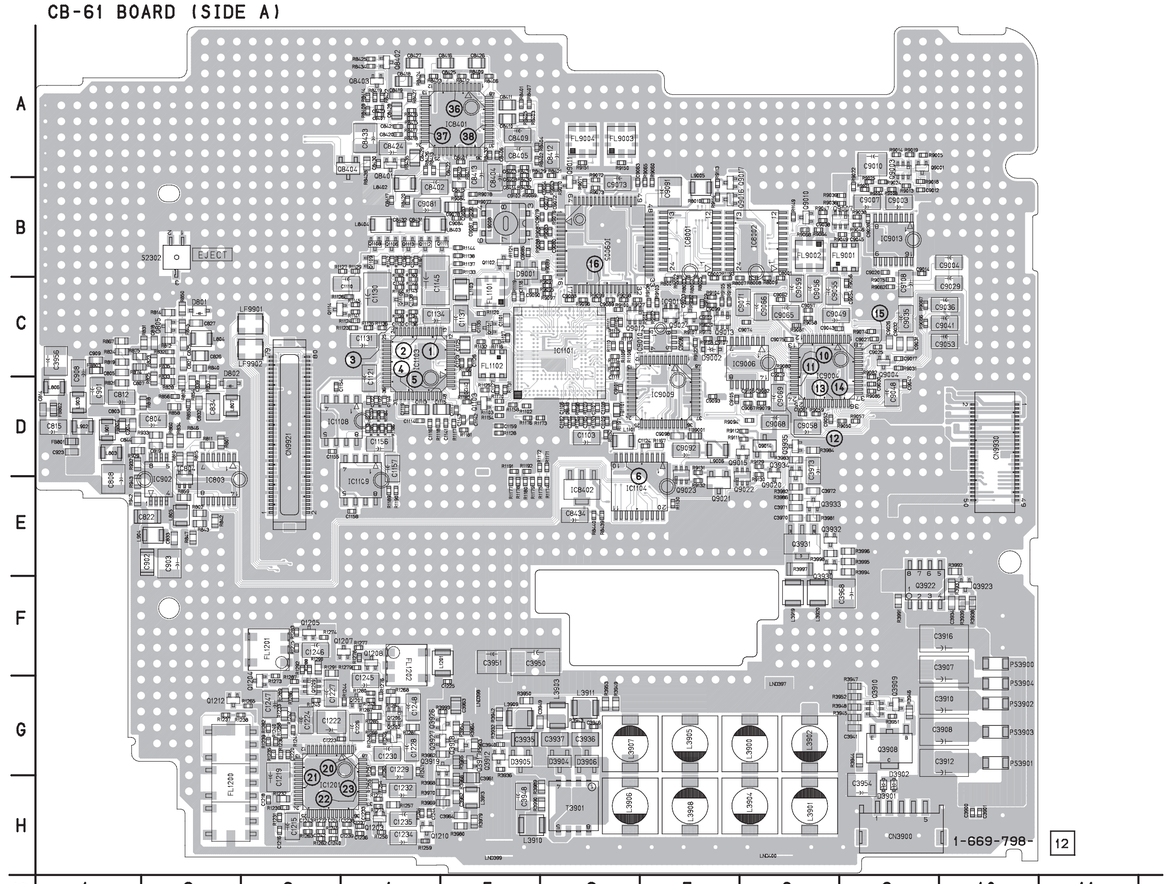

CB-61 BOARD (SIDE B)

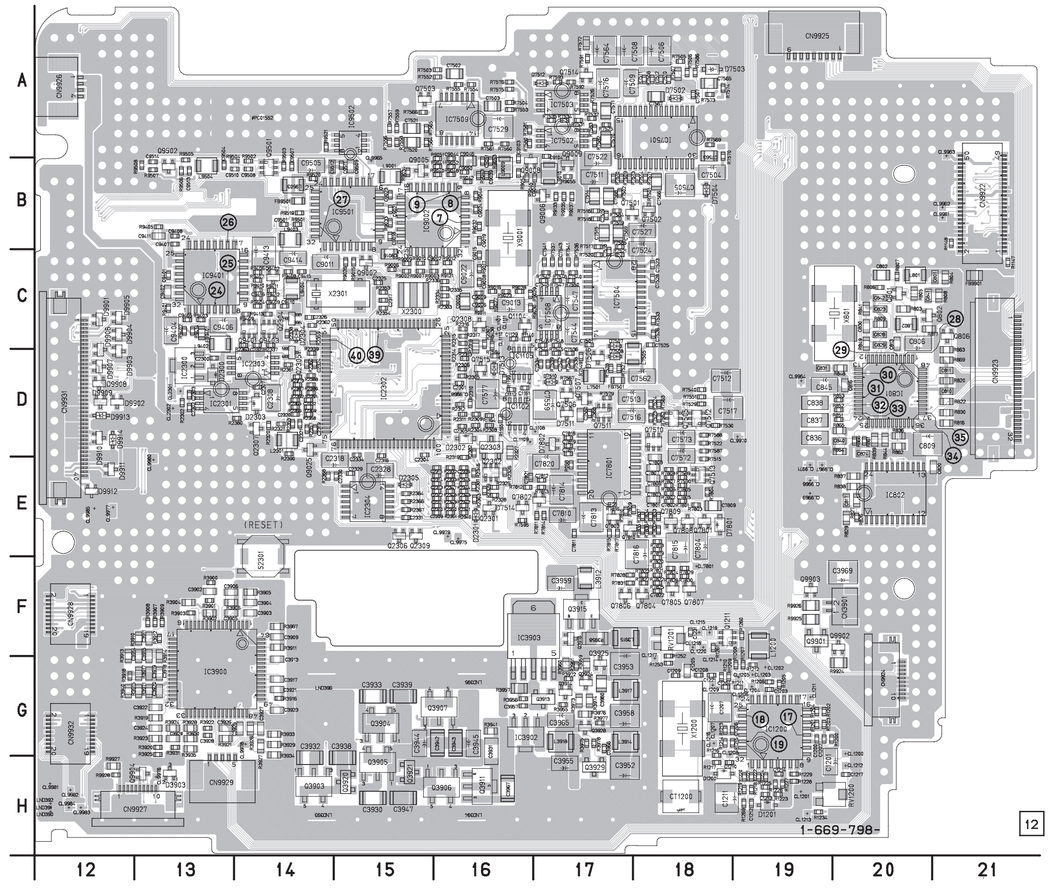

• Refer to page 4-7 for CB-61 printed wiring board.

CB-61 BOARD (1/10)

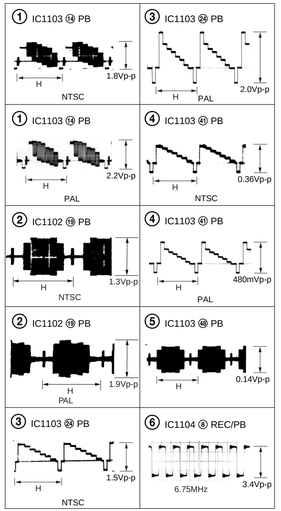

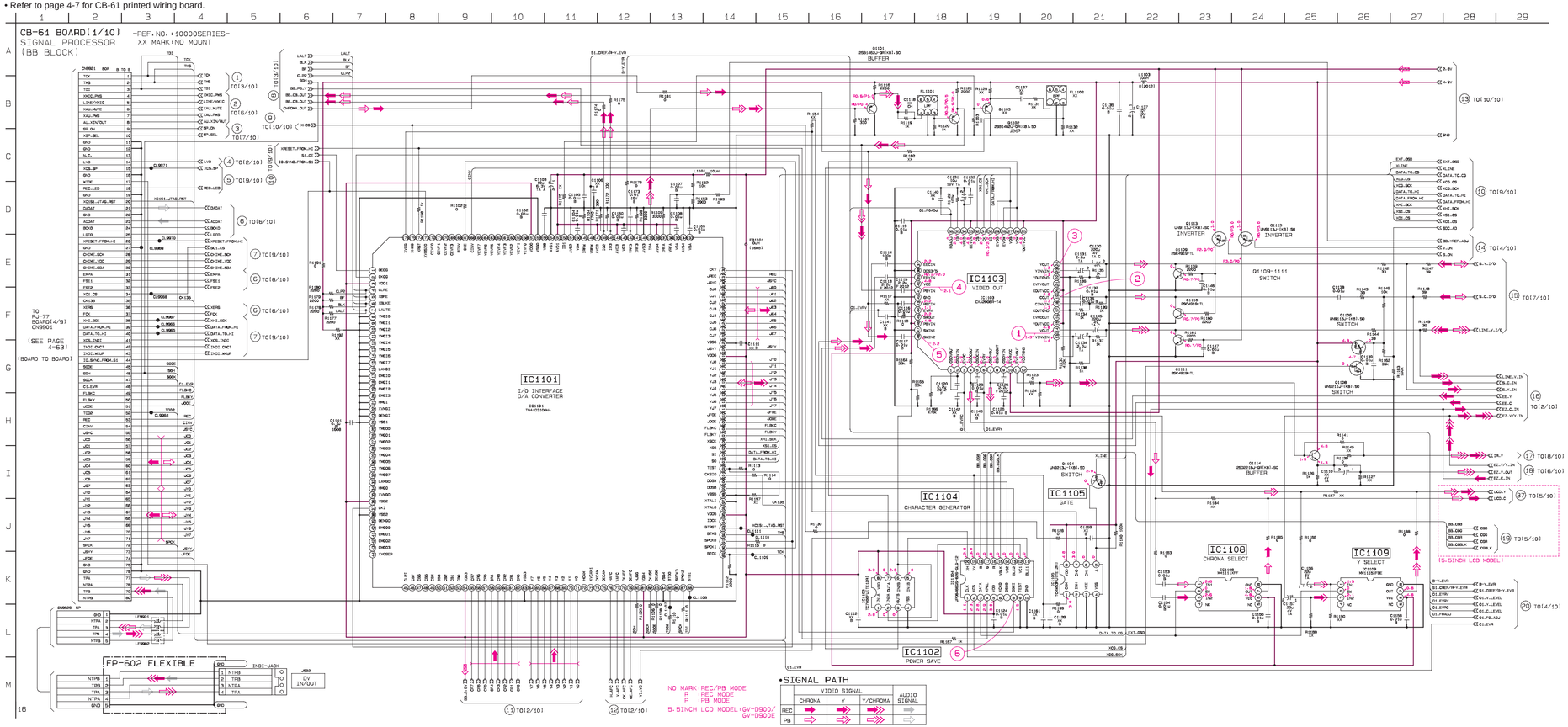

• Refer to page 4-7 for CB-61 printed wiring board.

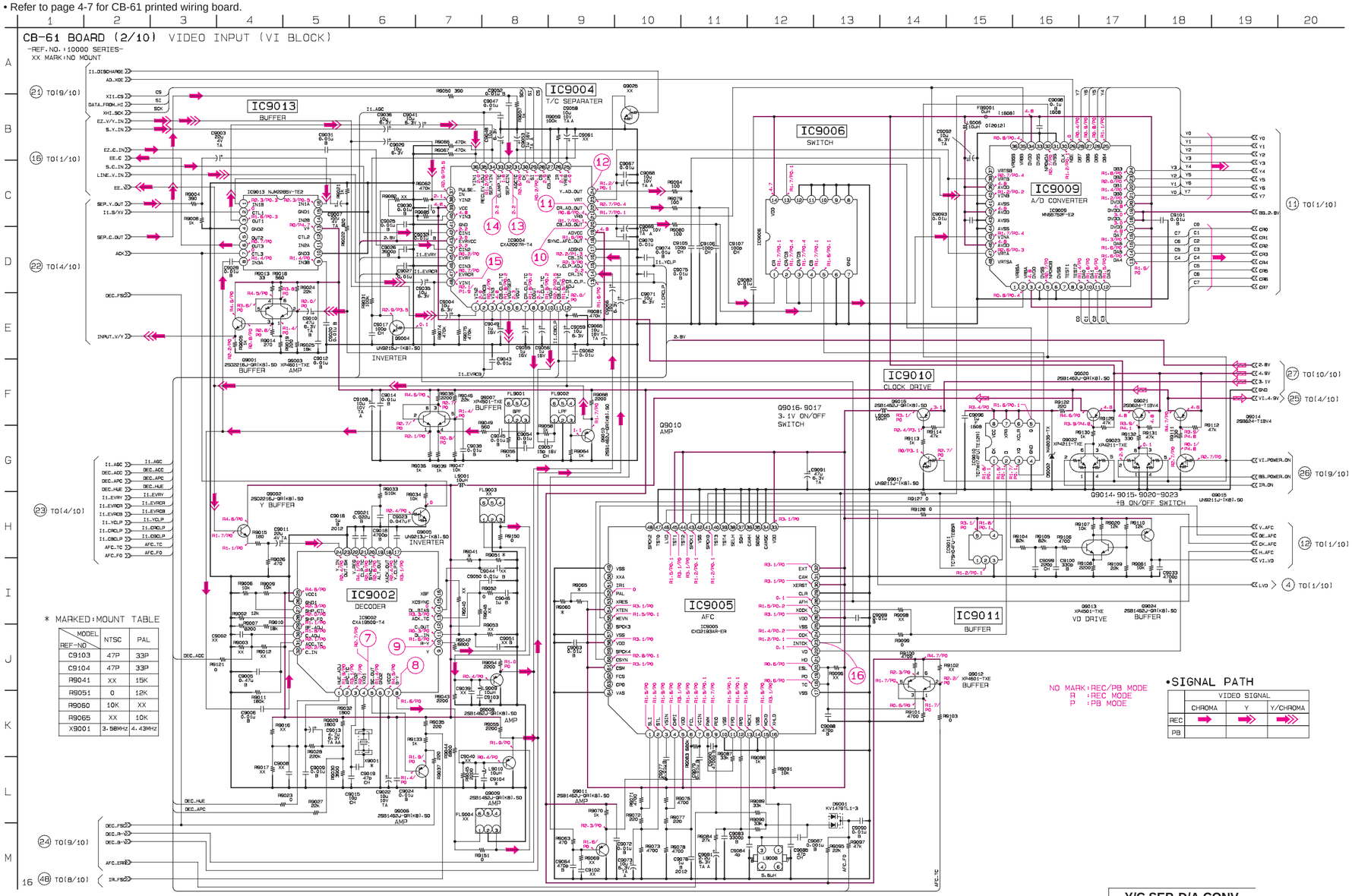

CB-61 BOARD (2/10)

S VIDEO REC

⑦ IC9002 ④ NTSC 3.579545MHz 900mVp-p	⑬ IC9004 ㉜ PB H 0.32Vp-p NTSC
⑦ IC9002 ④ PAL 4.43MHz 740mVp-p	⑬ IC9004 ㉜ PB H 1.4Vp-p PAL
⑧ IC9002 ⑧ H 1.6Vp-p	⑭ IC9004 ㉔ H 0.5Vp-p NTSC
⑨ IC9002 ⑯ H 1.2Vp-p	⑭ IC9004 ㉔ H 1.0Vp-p PAL
⑩ IC9004 ㉙ REC H 1.3Vp-p	⑮ IC9004 ㊽ H 220mVp-p NTSC
⑪ IC9004 ㉒ REC H 1.3Vp-p	⑮ IC9004 ㊽ PAL H 400mVp-p
⑫ IC9004 ㉔ H 1.0Vp-p NTSC	⑯ IC9005 ㉓ 13.5MHz 3.0Vp-p NTSC
⑫ IC9004 ㉔ H PAL 2.0Vp-p	⑯ IC9005 ㉓ 11.87MHz 3.0Vp-p PAL

Y/C SEP, D/A CONV
CB-61 (2/10)

CB-61 BOARD (3/10)

• Refer to page 4-7 for CB-61 printed wiring board.

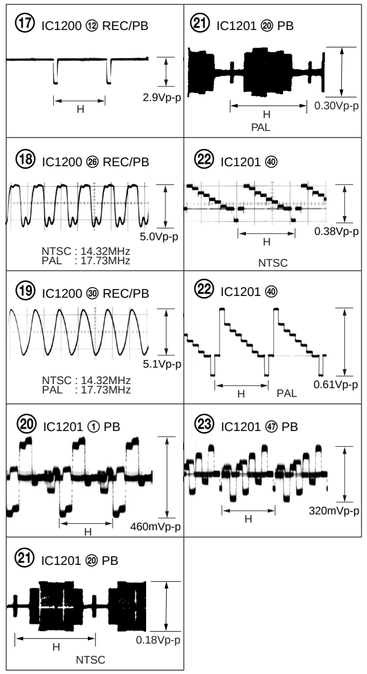

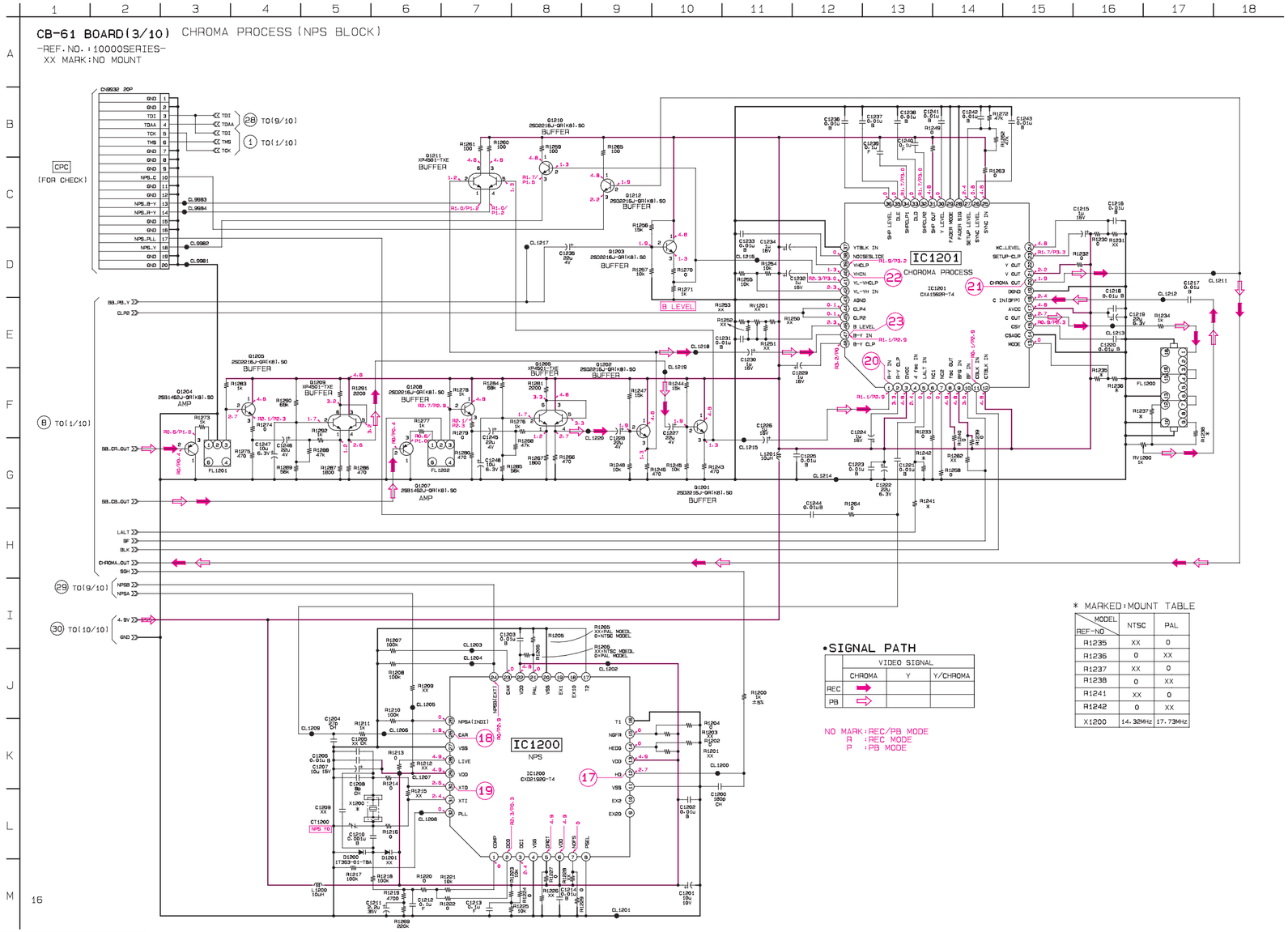

• Refer to page 4-7 for CB-61 printed wiring board.

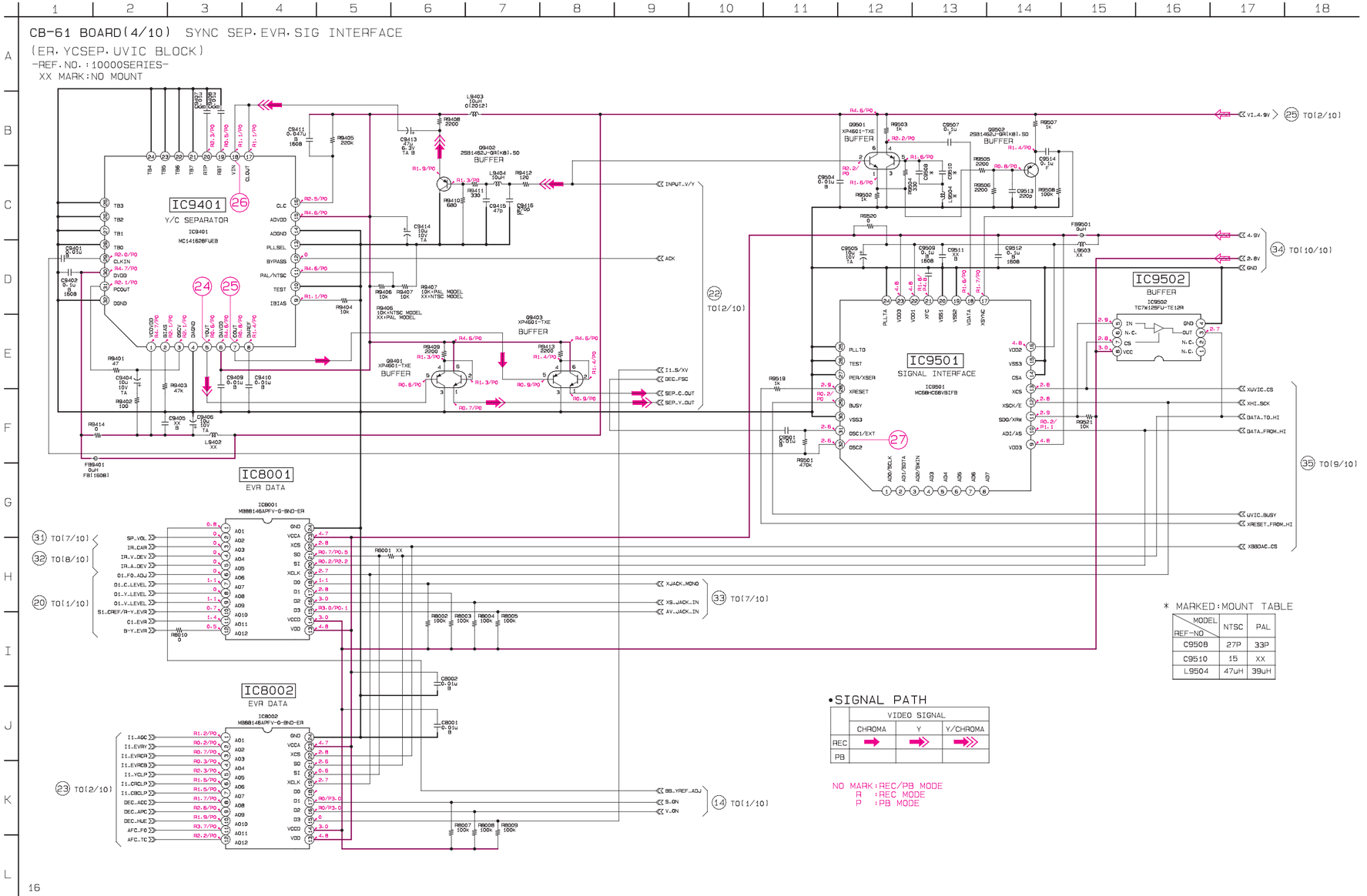

CB-61 BOARD (4/10)

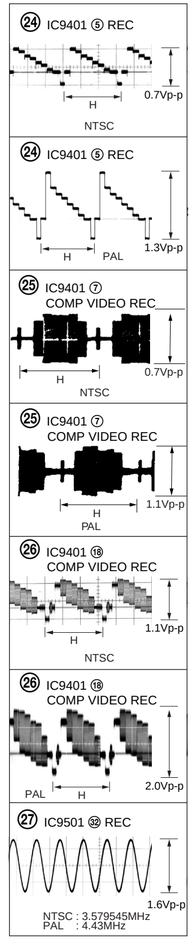

CB-61 BOARD (5/10)

• Refer to page 4-7 for CB-61 printed wiring board.

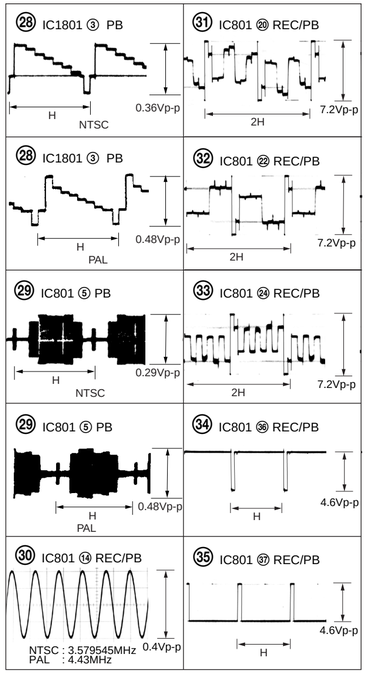

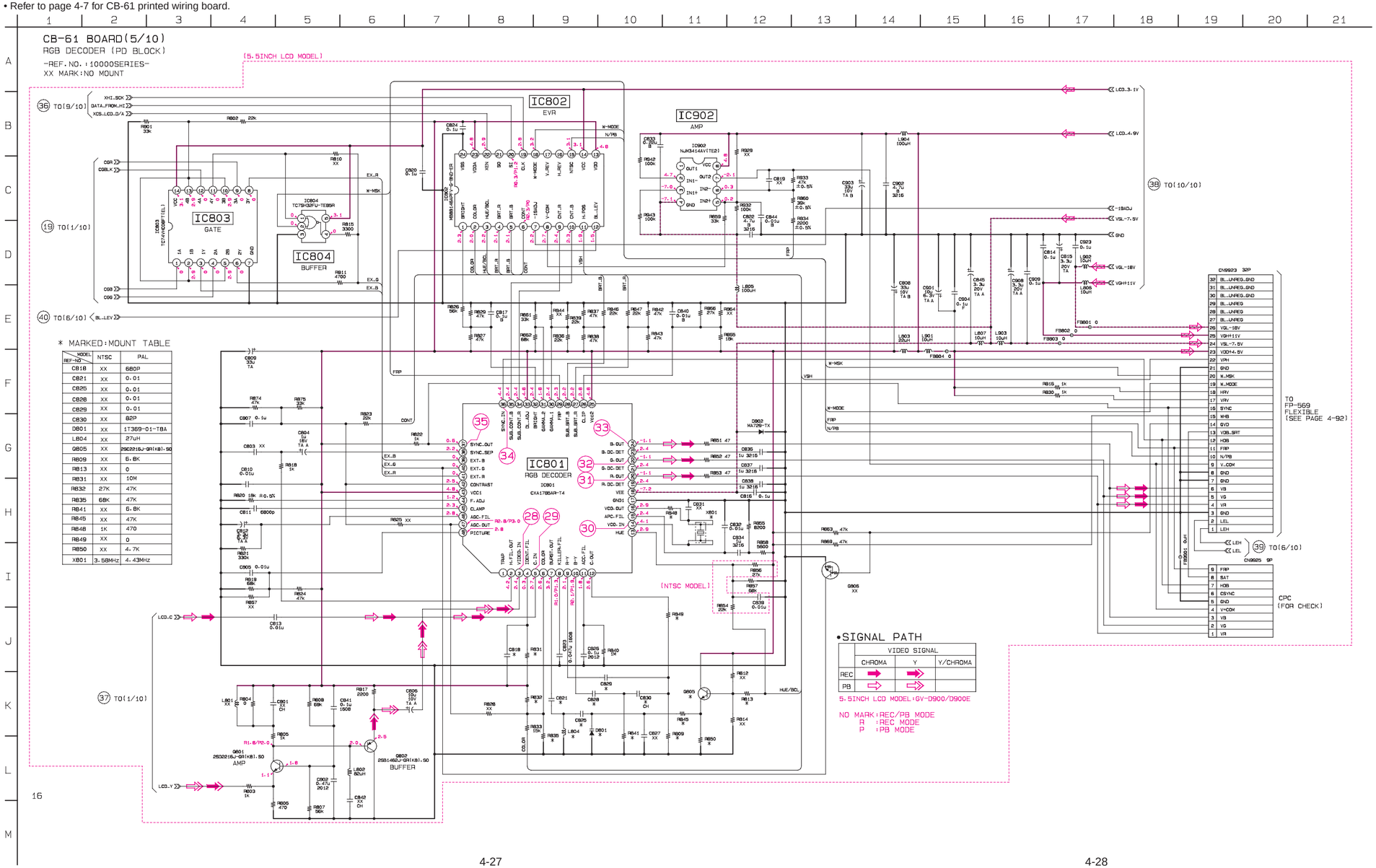

• Refer to page 4-7 for CB-61 printed wiring board.

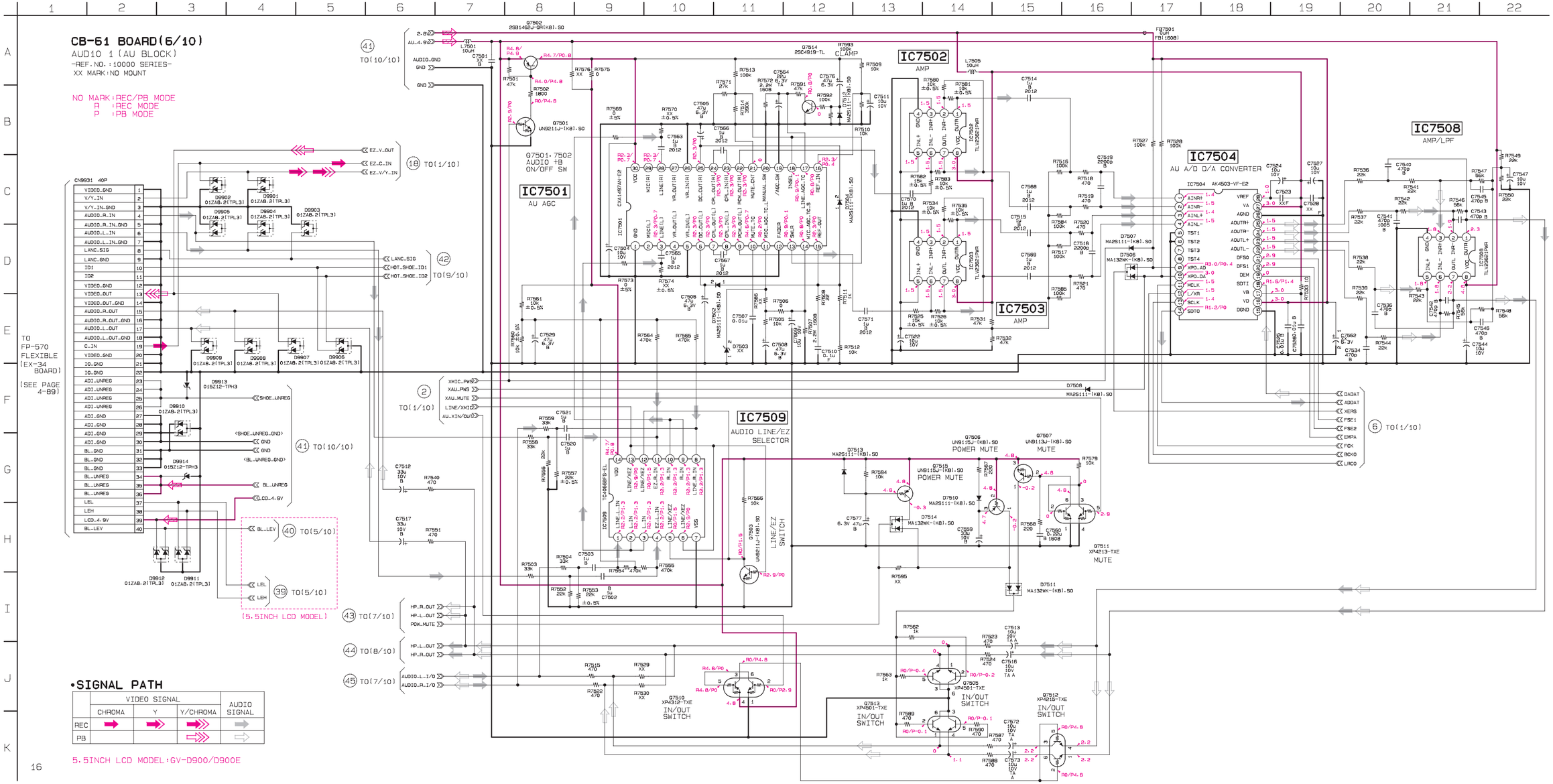

• Refer to page 4-7 for CB-61 printed wiring board.

CB-61 BOARD(7/10)

-REF.NO.:10000 SERIES-
XX MARK:NO MOUNT

AUDIO2
(HA BLOCK)

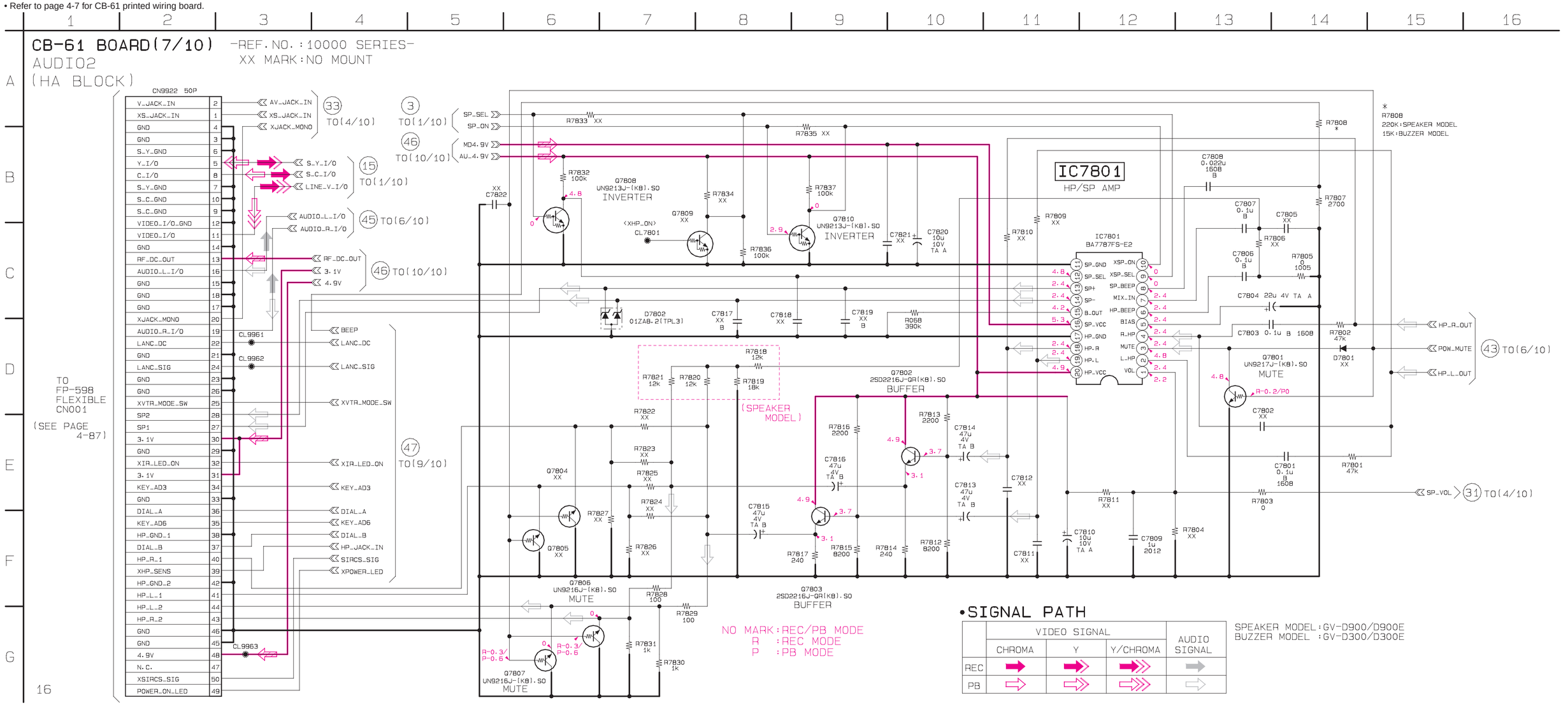

•SIGNAL PATH

	VIDEO SIGNAL			AUDIO SIGNAL
	CHROMA	Y	Y/CHROMA	
REC	➡	➡	➡	➡
PB	⇨	⇨	⇨	⇨

SPEAKER MODEL:GV-D900/D900E
BUZZER MODEL :GV-D300/D300E

• Refer to page 4-7 for CB-61 printed wiring board.

CB-61 BOARD(8/10) (IR BLOCK)

-REF.NO.:10000 SERIES-
XX MARK:NO MOUNT
NO MARK:REC/PB mode

IC8402 S-81340HG-KJ-T1
IC8402
4.9V REG

IC8401
IR VIDEO/AUDIO PROCESSOR
IC8401 LA9511M-TBM

Q8401 2SB1462J-GR(KB).5Q BUFFER
Q8402 2SD2015J-GR(KB).5Q BUFFER
Q8403 UN5213J-(KB).5Q SWITCH
Q8404 2SA1036K-T1E4 AMP
D9902 2SB1462J-GR(KB).5Q CURRENT DET
D9901 2SB924-T1BV4 IR 5V REG
Q9903 UN521LJ-(KB).5Q IR DRV SWITCH

CN9924 10P
FP-572 FLEXIBLE
CN361 6P

Note:
The components identified by mark ⚠ or dotted line with mark ⚠ are critical for safety. Replace only with part number specified.

Note:
Les composants identifiés par une marque ⚠ sont critiques pour la sécurité. Ne les remplacer que par une pièce portant le numéro spécifié.

•SIGNAL PATH

	VIDEO SIGNAL			AUDIO SIGNAL
	CHROMA	Y	Y/CHROMA	
REC			➡	➡
PB			⇨	⇨

IR-29 BOARD(IR TRANSMITTER)
-REF NO:3000 SERIES-
XX MARK:NO MOUNT
NO MARK:REC/PB mode

5.5INCH LCD MODEL:GV-D900/D900E

CB-61 BOARD (8/10)
REC/PB
AV LASER LINK ON

36 IC8401 ⑦
120mVp-p
NTSC : 3.579545MHz
PAL : 4.43MHz

37 IC8401 ㉒
50nsec/div
0.5V/div
1.2Vp-p

38 IC8401 ㊶ PB
0.43Vp-p
NTSC

38 IC8401 ㊶ PB
0.44Vp-p
PAL

IR-29 (IR TRANSMITTER) PRINTED WIRING BOARD
— Ref. No. IR-29 Board; 3,000 Series —

IR-29 BOARD (SIDE A)

IR-29 BOARD (SIDE B)

PANEL CLOSE

There are few cases that the part printed on this diagram isn't mounted in this model.

IR-29 BOARD

C382 A-2
C383 B-1
C391 B-1
C392 C-1
C393 A-2

CN361 B-3

D362 C-2
D363 C-1

F361 B-2

L363 B-2

Q364 B-1
Q365 C-2

R384 B-1
R385 B-1
R388 C-1
R389 C-1
R390 A-1
R392 B-2

S361 A-1

For printed wiring boards
• Chip parts.
Transisto

• This board is four-layer printed board. However the patterns of layers two and three have not been included in the diagram.

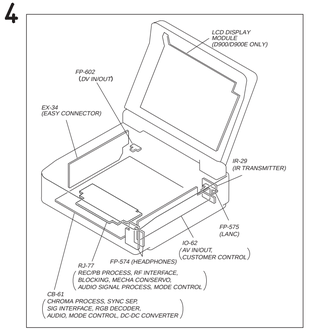
LCD DISPLAY MODULE (GV-D900/D900E ONLY)
FP-602 (DV IN/OUT)
EX-34 (EASY CONNECTOR)
IR-29 (IR TRANSMITTER)
FP-575 (LANC)
IO-62 (AV IN/OUT, CUSTOMER CONTROL)
FP-574 (HEADPHONES)
R3-77
REC/PB PROCESS, RF INTERFACE, BLOCKING, MECHA CONSERVO, AUDIO SIGNAL PROCESS, MODE CONTROL
CB-61
CHROMA PROCESS, SYNC SEP, SIG INTERFACE, RGB DECODER, AUDIO, MODE CONTROL, DC-DC CONVERTER

CB-61 BOARD (9/10)

39 IC2302 ⑱ REC/PB

40 IC2302 ⑱ REC/PB

• Refer to page 4-7 for CB-61 printed wiring board.

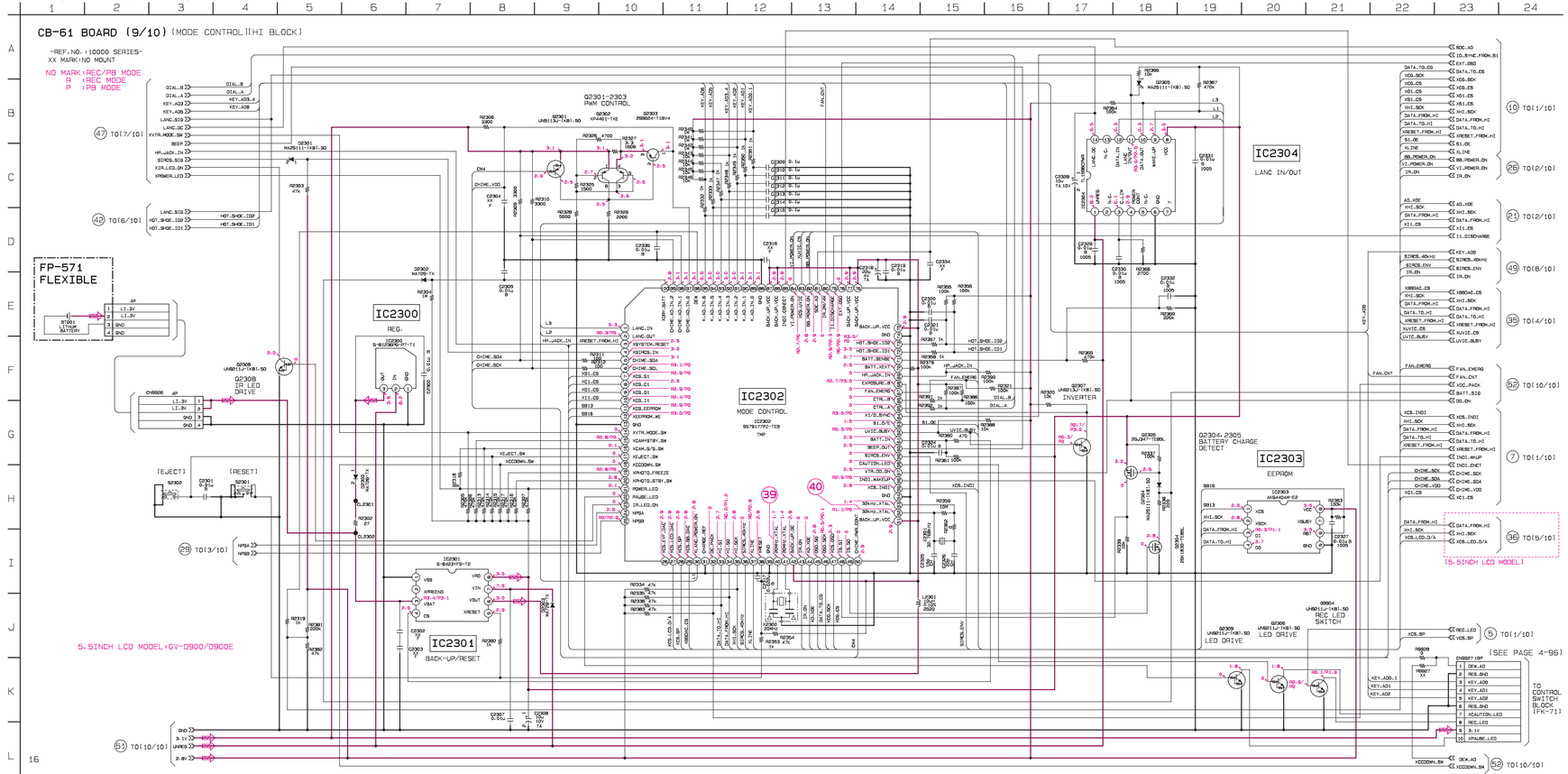

• Refer to page 4-7 for CB-61 printed wiring board.

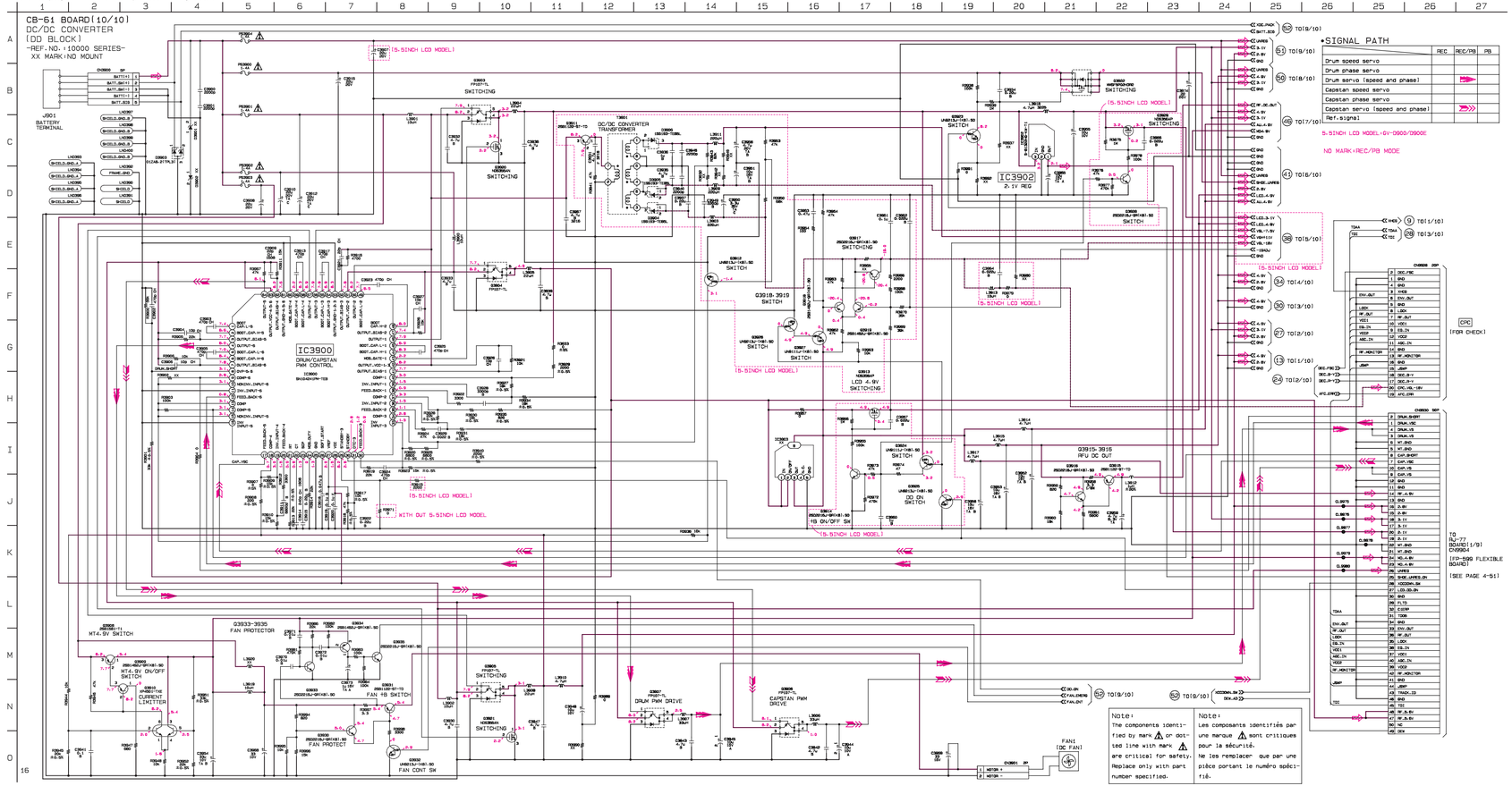

RJ-77 (REC/PB PROCESS, RF INTERFACE, BLOCKING, MECHA CON/SERVO, AUDIO SIGNAL PROCESS, MODE CONTROL) PRINTED WIRING BOARD

— Ref. No. RJ-77 Board; 20,000 Series —

RJ-77 BOARD

C1600 C-5
C1601 A-5
C1601 B-5
C1602 B-6
C1603 B-7
C1604 B-4
C1605 B-5
C1700 D-7
C1703 C-5
C1704 D-6
C1705 D-6
C1900 B-11
C1901 B-11
C1902 B-11
C1903 B-10
C1904 B-11
C1905 B-10
C1906 B-10
C1907 B-10
C1908 B-10
C1909 B-10
C1910 B-10
C1911 A-10
C1912 A-10
C1913 A-11
C1914 A-11
C1915 A-11
C1916 A-11
C1917 C-14
C1918 A-11
C2111 B-13
C2112 C-13
C2700 D-4
C2701 E-4
C2702 D-3
C2703 D-4
C2704 D-2
C2705 D-15
C2706 E-3
C2708 E-3
C2709 E-2
C2712 E-1
C2713 E-2
C2714 E-3
C2715 D-3
C2718 E-2
C2720 E-2
C2721 D-2
C2724 E-2
C2725 D-2
C2726 D-2
C2727 E-2
C2728 D-2
C2731 D-3
C2732 D-3
C2733 D-2
C2735 E-14
C2736 D-14
C2737 D-14
C2738 D-14
C2744 E-15
C2745 E-15
C2747 C-2
C2749 C-2
C2750 C-1
C2751 D-14
C2752 C-2
C2753 E-15
C2754 E-14
C2755 B-2
C2757 C-2
C2758 C-2
C2759 E-14
C2763 E-14
C2769 D-2
C2771 D-2
C2772 D-2
C2773 E-4
C2774 D-4
C2775 D-3
C2770 D-2
C2799 D-4
C2800 D-1

C2801 E-14
C3100 D-13
C3101 D-14
C3102 C-13
C3103 D-14
C3104 E-11
C3105 E-14
C3106 C-14
C3107 E-14
C3108 E-14
C3109 E-13
C3110 D-12
C3111 D-13
C3112 D-13
C3113 D-12
C3114 D-12
C3115 D-12
C3116 D-12
C3117 E-12
C3118 D-12
C3120 E-12
C3121 E-12
C3123 E-13
C3124 E-13
C3125 E-12
C3126 D-11
C3127 D-11
C3128 E-12
C3129 E-12
C3130 D-10
C3131 D-11
C3132 D-11
C3133 E-13
C3134 D-11
C3135 E-7
C3136 D-10
C3137 E-11
C3138 E-4
C3139 E-5
C3140 D-5
C3141 E-11
C3142 D-11
C3143 E-11
C3144 E-11
C3145 E-11
C3146 E-9
C3147 E-11
C3148 E-9
C3149 E-5
C3150 E-5
C3151 E-5
C3152 D-4
C3153 D-12
C3154 D-12
C3155 E-14
C3157 D-12
C3158 D-12
C3159 D-12
C3160 D-11
C3500 B-12
C3501 D-11
C3502 C-11
C3504 D-5
C3506 D-6
C3512 C-10
C3514 C-9
C3520 C-11
C3521 C-10
C3527 D-11
C3528 D-12
C3529 C-9
C3530 C-10
C3531 C-11
C3532 D-10
C3533 D-10
C6100 D-4
C6101 D-4
C6102 C-3
C6103 C-3
C6104 C-3
C6105 D-3
C6106 C-3
C6107 C-3

C6108 B-4
C7901 E-15
C7902 C-16
C7903 C-15
C7904 C-16
C7905 D-15
C7906 D-15
C7907 C-16
C7908 C-16
C7909 D-15
C7910 D-16
C7911 D-15
C7912 D-16
C7913 A-14
C7914 A-14
C7915 D-15
C7916 A-3
C7917 D-16
C7919 C-15
C7920 B-13
C7921 B-13
C7922 A-13
C7923 A-13
C7924 A-14
C7925 B-13
C7926 B-15
C7927 B-15
C7928 B-12
C7929 A-12
C7930 C-10
C7931 C-16
C7932 C-16
C7933 A-14
C7934 A-3
C7935 B-4
C7936 A-3
C7937 B-3

CN2708 E-3
CN3100 D-9
CN3101 E-7
CN3102 E-6
CN3103 D-5
CN3104 E-2
CN9901 C-8
CN9904 D-16

D1900 B-11
D1901 B-11
D1902 B-10
D1903 A-11
D1904 A-11
D2702 E-4
D2703 E-3
D3101 E-6
D6100 C-3
D6101 C-3
D7901 D-16
D7902 A-4

FB1600 C-5
FB1601 A-6
FB1900 A-12
FB1901 B-10
FB1902 B-11
FB1903 B-10
FB1904 B-11
FB1905 B-11
FB1906 B-11
FB2100 C-13
FB3100 D-12
FB6100 D-14

FL2700 D-2
FL2701 D-1

IC1600 C-5
IC1601 B-7
IC1602 B-6
IC1700 D-7
IC1701 C-6
IC1900 B-11
IC1901 C-14

IC1902 A-11
IC2100 C-13
IC2700 E-14
IC2701 C-2
IC2702 D-14
IC2703 D-3
IC2704 E-2
IC3100 D-14
IC3101 E-14
IC3102 E-13
IC3103 D-10
IC3104 E-5
IC3500 C-12
IC3501 D-6
IC3502 C-10
IC6101 C-3
IC6102 B-4
IC7901 E-15
IC7902 A-3
IC7903 C-15
IC7904 D-15
IC7908 A-13
IC7909 B-13
IC7910 B-15
IC7911 B-13
IC7912 A-13
IC7913 A-13
IC7914 A-13
IC7915 A-3
IC7916 D-16

L1600 C-5
L1900 A-11
L1901 B-11
L1902 A-11
L2100 C-13
L2700 E-3
L2701 D-15
L2703 D-3
L2704 D-2
L2705 E-15
L2707 B-2
L2708 D-15
L2709 B-1
L2710 D-14
L2711 D-13
L3100 D-13
L3101 D-12
L3103 E-11
L3504 C-11
L3505 D-11
L3506 D-12
L6100 D-14
L6101 C-3
L7901 D-15
L7902 C-1
L7903 B-15
L7904 B-14

Q2701 D-2
Q2702 D-2
Q2703 D-2
Q2704 C-2
Q2705 C-3
Q2706 E-15
Q2707 E-15
Q2708 C-1
Q2709 C-1
Q2710 E-14
Q2711 D-1
Q3100 E-7
Q3101 D-11
Q3102 E-6
Q3103 E-5
Q7901 D-16
Q7902 D-16

R1601 C-7
R1900 B-10
R1901 B-10
R1902 B-10
R1903 B-11
R1904 B-11

R1905 B-10
R1906 B-10
R1907 B-10
R1908 B-10
R1909 C-10
R1910 C-14
R1911 B-10
R1912 B-10
R1913 B-10
R1914 A-11
R1915 B-14
R1916 C-14
R1917 A-11
R1918 A-11
R1919 A-11
R1920 A-11
R1921 A-11
R1922 A-11
R1923 C-14
R1924 C-14
R1925 C-14
R1926 C-15
R1927 B-11
R1928 B-11
R1929 B-11
R1930 C-14
R1931 A-11
R1932 A-11
R2118 C-13
R2122 C-13
R2123 C-13
R2124 C-13
R2125 C-13
R2126 C-13
R2127 C-13
R2128 C-13
R2129 C-13
R2130 C-13
R2131 B-14
R2172 C-13
R2173 B-13
R2174 B-13
R2175 B-13
R2176 B-13
R2701 E-2
R2702 D-13
R2703 E-2
R2704 D-2
R2705 E-2
R2706 D-2
R2707 E-2
R2709 E-2
R2711 E-3
R2712 E-3
R2713 D-3
R2714 D-3
R2717 C-2
R2718 D-2
R2719 D-2
R2720 C-2
R2721 D-3
R2727 D-2
R2735 E-15
R2737 E-15
R2740 D-14
R2741 D-14
R2743 D-14
R2744 D-14
R2745 C-1
R2746 C-1
R2747 E-14
R2748 E-15
R2749 E-14
R2750 C-1
R2751 B-1
R2752 E-4
R2753 E-4
R2754 E-3
R2755 E-3
R2756 E-4
R2757 D-4
R2758 D-4

R2759 D-4
R2760 D-4
R2761 D-4
R2765 D-2
R2766 D-2
R2767 D-2
R2768 E-2
R2769 D-2
R2770 D-2
R2817 E-2
R2818 E-15
R2819 E-14
R2820 E-14
R2821 E-14
R2822 D-1
R2823 D-1
R2824 C-2
R3100 D-14
R3101 D-14
R3102 D-13
R3103 D-13
R3104 E-2
R3105 E-5
R3106 E-6
R3107 E-6
R3109 D-13
R3110 D-13
R3111 D-13
R3112 D-13
R3113 D-13
R3117 C-14
R3118 C-14
R3119 D-11
R3119 C-14
R3120 E-11
R3122 E-14
R3123 E-13
R3124 E-13
R3125 E-12
R3126 E-12
R3127 E-12
R3128 E-12
R3129 E-12
R3130 E-13
R3131 E-13
R3132 E-12
R3133 E-13
R3134 E-13
R3138 D-11
R3139 D-11
R3140 D-11
R3141 E-5
R3142 E-6
R3143 D-11
R3144 D-11
R3145 D-10
R3146 E-13
R3147 E-12
R3148 E-12
R3149 D-11
R3150 D-11
R3151 D-11
R3152 D-11
R3153 D-11
R3154 E-5
R3155 E-5
R3156 E-4
R3157 E-4
R3158 E-11
R3159 E-11
R3160 E-11
R3161 E-11
R3162 E-11
R3163 E-10
R3164 E-7
R3165 E-7
R3166 E-6
R3167 E-14
R3168 C-13
R3169 C-13
R3173 E-12
R3174 D-12
R3175 D-12

R3176 E-12
R3177 D-13
R3178 E-13
R3179 D-12
R3180 D-11
R3181 D-11
R3182 D-11
R3183 E-9
R3184 E-9
R3500 C-11
R3501 C-11
R3502 C-11
R3528 B-12
R3529 B-12
R3530 D-5
R3531 E-5
R3532 E-6
R3533 E-7
R3534 C-10
R3535 C-10
R3538 C-10
R3539 C-9
R3540 C-10
R3541 C-9
R3542 C-9
R3543 C-9
R3544 C-9
R3545 C-9
R3546 C-9
R3551 C-10
R3556 C-11
R3557 D-11
R3560 E-6
R3561 C-11
R3562 C-11
R3563 C-10
R6100 C-2
R6101 C-3
R6102 C-3
R6103 C-3
R6104 C-3
R6105 C-3
R6107 B-4
R6114 C-3
R6115 C-3
R6116 C-3
R6117 C-3
R6118 D-4
R7901 D-15
R7902 C-15
R7903 C-15
R7904 D-15
R7905 D-16
R7906 C-16
R7907 C-16
R7908 C-16
R7909 D-15
R7910 D-16
R7911 D-15
R7912 E-16
R7913 B-13
R7918 D-15
R7918 E-16
R7919 D-16
R7920 A-14
R7921 A-13
R7922 B-15
R7923 B-15
R7924 B-15
R7925 B-15
R7926 B-14
R7927 B-14
R7928 B-14
R7929 B-14
R7930 B-14
R7931 B-15
R7932 B-15
R7933 B-14
R7934 B-15
R7935 A-12
R7936 D-16
R7937 D-16
R7938 C-16

R7939 C-16
R7940 C-16
R7941 B-3
R7942 B-14
R7943 D-15
R7944 D-15
R7945 D-16
R7946 B-3
R7947 A-4
R7948 A-4
R7949 A-3
R7950 A-4
R7951 A-3
R7952 B-3
R9901 C-14

X1900 B-10
X3100 C-13
X3500 C-11
X3501 D-10
X7901 C-15
X7902 E-16

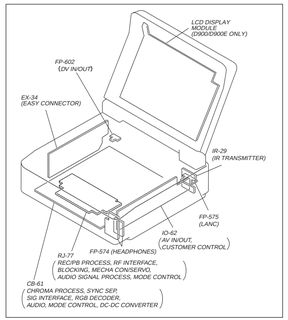
LCD DISPLAY MODULE (D900/D900E ONLY)
FP-602 (DV IN/OUT)
EK-34 (EASY CONNECTOR)
IR-29 (IR TRANSMITTER)
FP-575 (LANC)
IO-62 (AV IN/OUT, CUSTOMER CONTROL)
RJ-77 REC/PB PROCESS, RF INTERFACE, BLOCKING, MECHA CON/SERVO, AUDIO SIGNAL PROCESS, MODE CONTROL
FP-574 (HEADPHONES)
CB-61 CHROMA PROCESS, SYNC SEP, SIG INTERFACE, RGB DECODER, AUDIO, MODE CONTROL, DC-DC CONVERTER

RJ-77 BOARD (SIDE A)

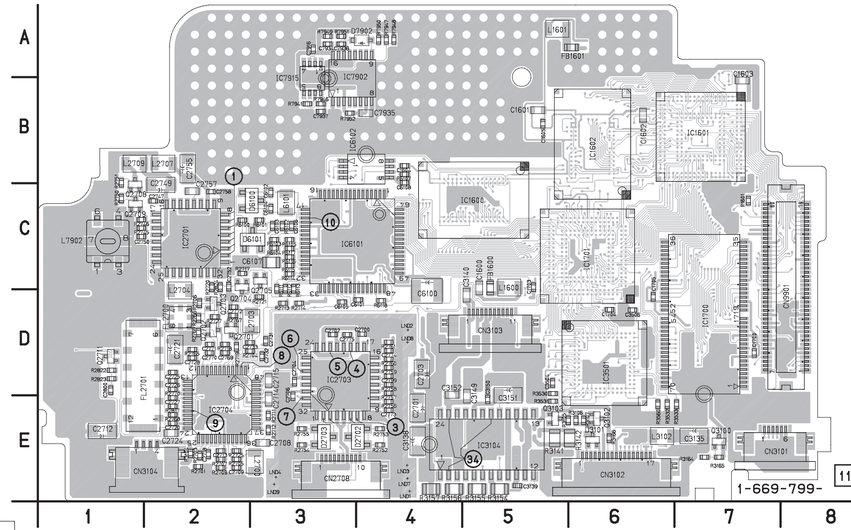

RJ-77 BOARD (SIDE B)

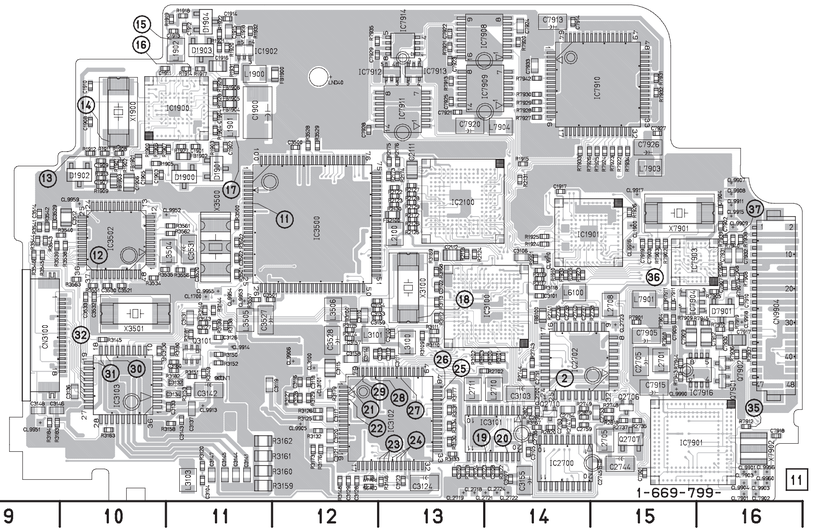

There are few cases that the part printed on this diagram isn't mounted in this model.

For printed wiring boards

- Chip parts.

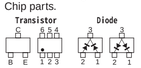

- This board is eight-layer printed board. However the patterns of layers two to seven have not been included in the diagram.

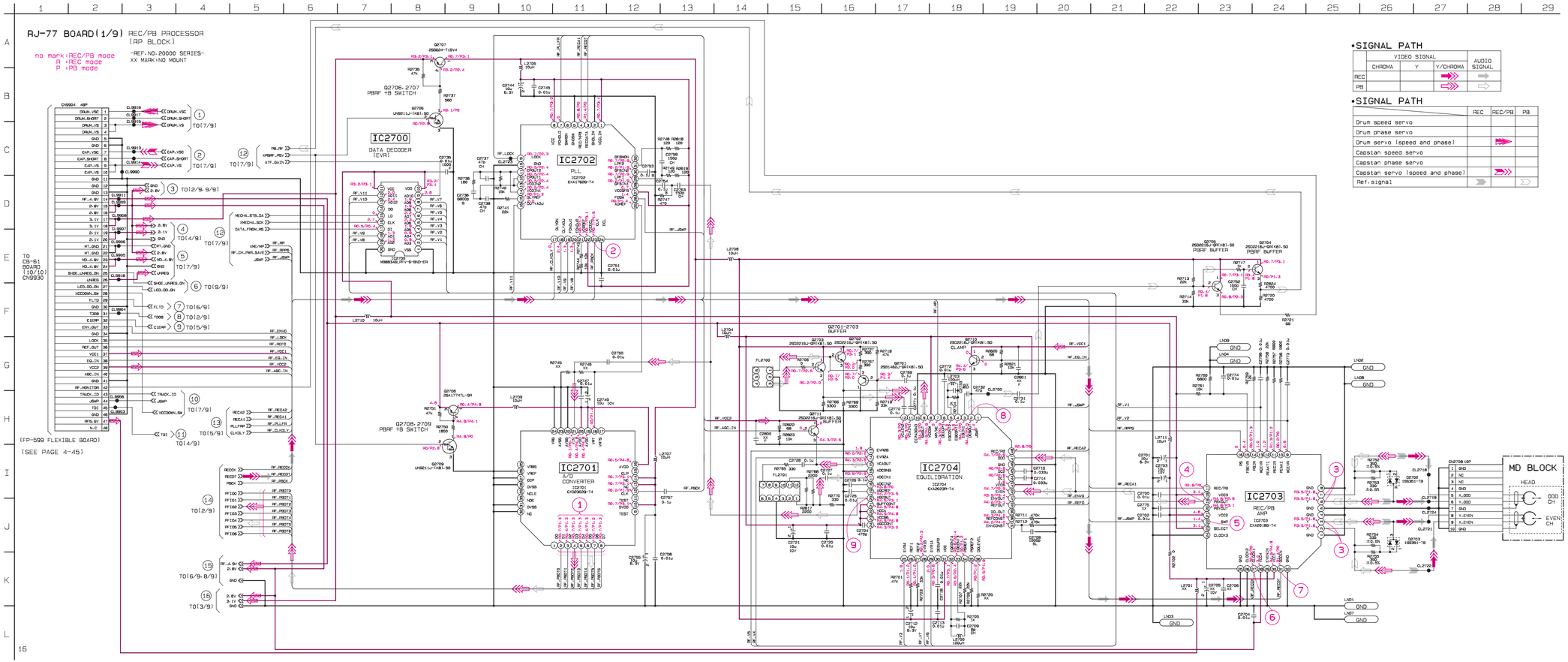

•SIGNAL PATH

	VIDEO SIGNAL			AUDIO SIGNAL
	CHROMA	Y	Y/CHROMA	
REC				
PB				

•SIGNAL PATH

	REC	REC/PB	PB
Drum speed servo			
Drum phase servo			
Drum servo (speed and phase)			
Capstan speed servo			
Capstan phase servo			
Capstan servo (speed and phase)			
Ref.signal			

RJ-77 BOARD (1/9)

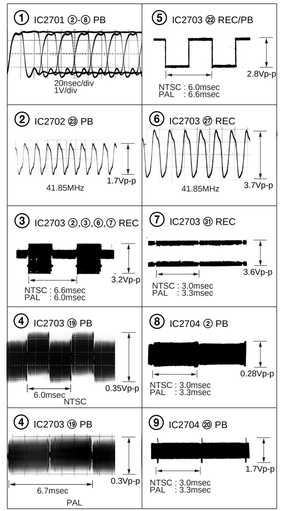

• See page 4-48 for RJ-77 BOARD printed wiring board.

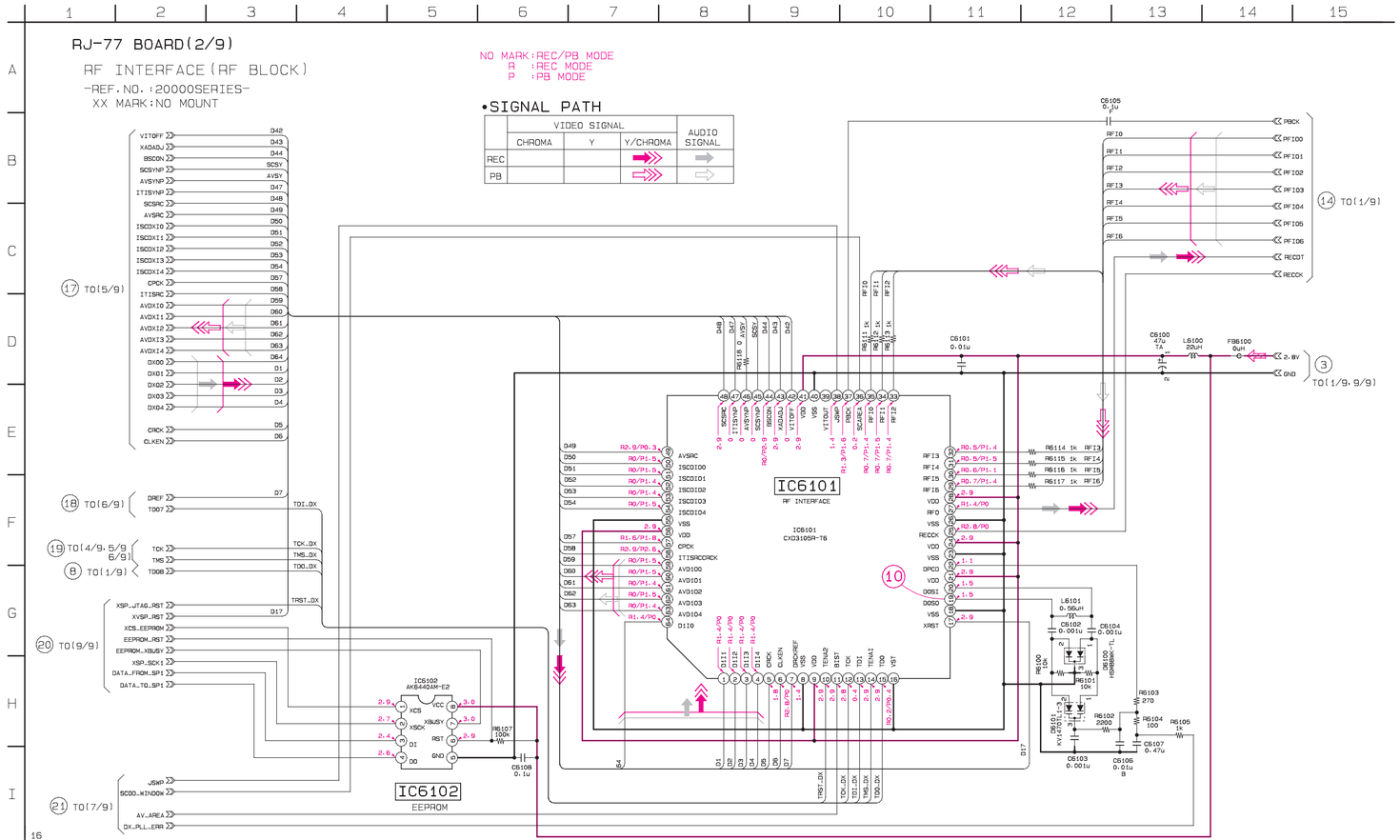

RJ-77 BOARD (2/9)

⑩ IC6101 @ (C6102)
REC/PB
41.85MHz
NTSC : 2.8Vp-p
PAL : 1.2Vp-p

• See page 4-48 for RJ-77 BOARD printed wiring board.

RJ-77 BOARD(3/9) DV SIGNAL PROCESS(ID BLOCK)

-REF.NO.:20000SERIES-

XX MARK:NO MOUNT

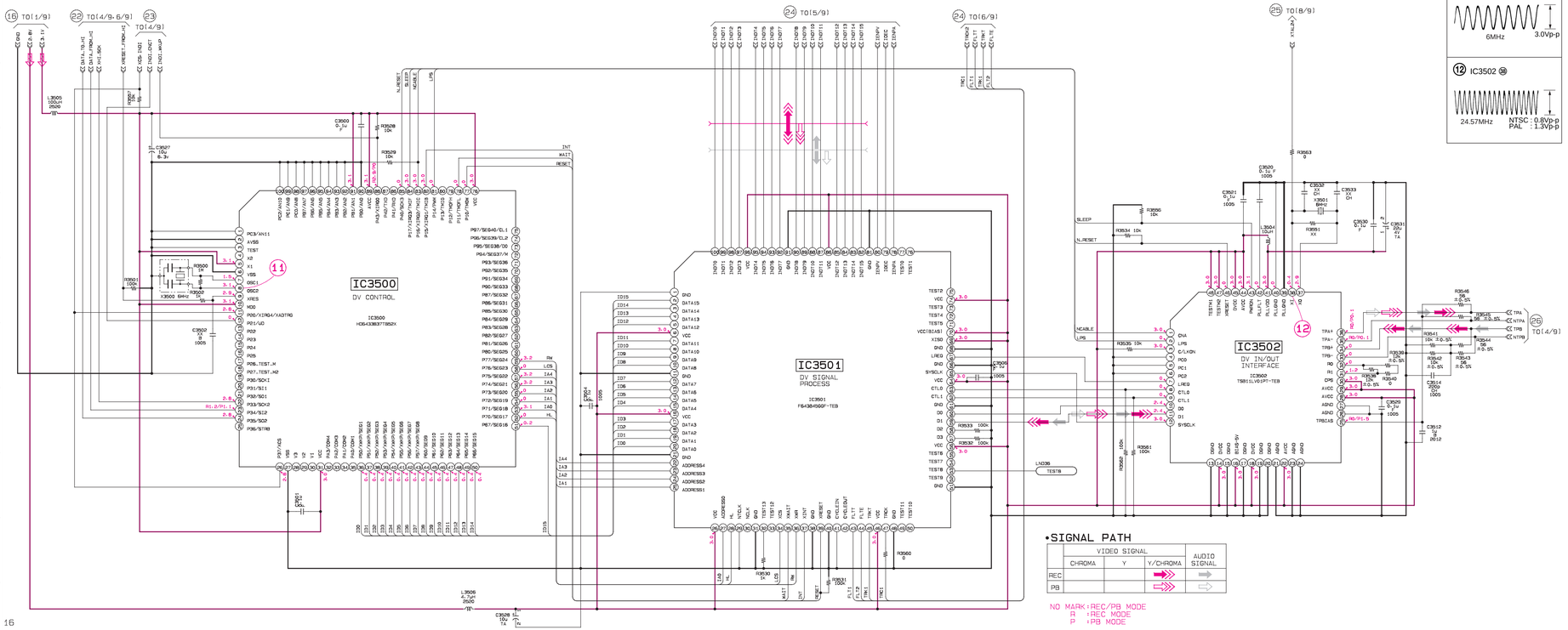

RJ-77 BOARD (3/9)

REC/PB

⑪ IC3500 ⑤

6MHz 3.0Vp-p

⑫ IC3502 ㉔

24.57MHz NTSC : 0.8Vp-p
PAL : 1.3Vp-p

•SIGNAL PATH

	VIDEO SIGNAL			AUDIO SIGNAL
	CHROMA	Y	Y/CHROMA	
REC			⇒	⇨
PB			⇒	⇨

NO MARK:REC/PB MODE
R :REC MODE
P :PB MODE

DV SIGNAL PROCESS
RJ-77 (3/9)

• See page 4-48 for RJ-77 BOARD printed wiring board.

RJ-77 BOARD(4/9) BLOCKING (JC-U1 BLOCK)

-REF. NO. :20000SERIES-
XX MARK:NO MOUNT

NO MARK:REC/PB MODE
R :REC MODE
P :PB MODE

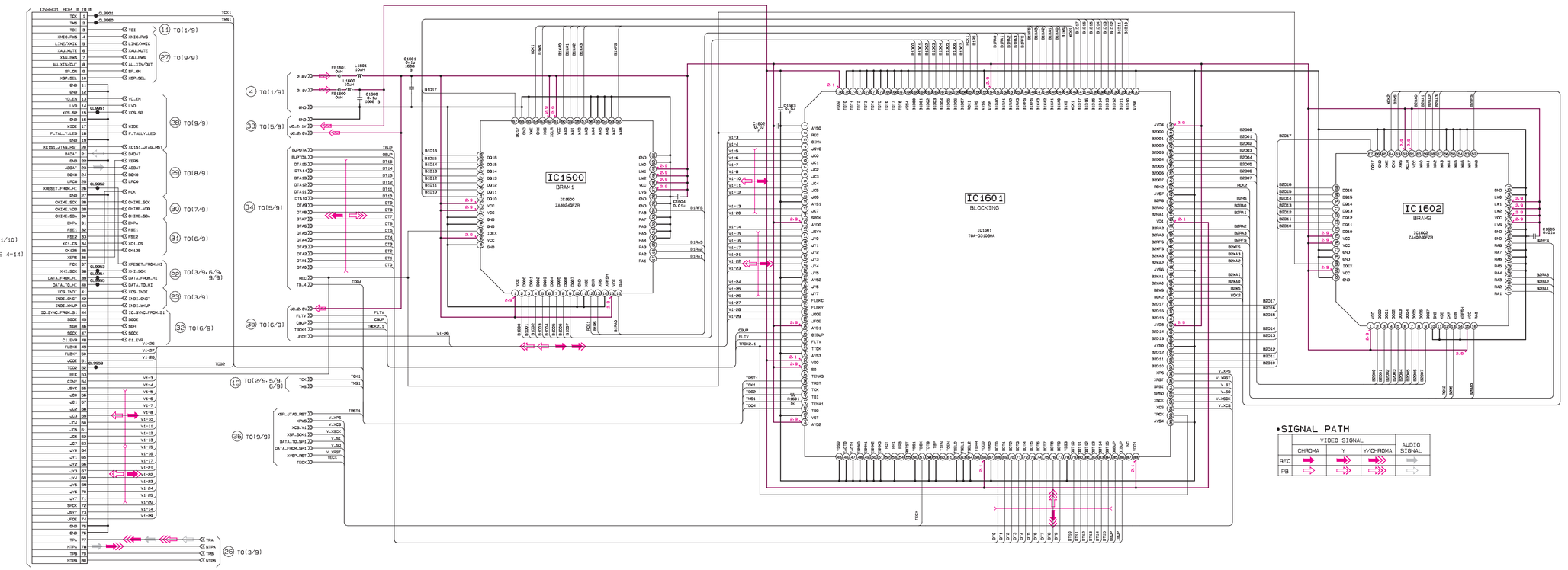

• Refer to page 4-48 for RJ-77 BOARD printed wiring board.

RJ-77 BOARD(5/9) ECC, TBC, CHCD (JC D1 BLOCK)

-REF.NO.:20000SERIES-

XX MARK:NO MOUNT

NO MARK+REC/PB MODE
R :REC MODE
P :PB MODE

IC1700
V RAM

IC1701
ECC- TBC- CHCD

IC1701
TDA-UP0B2001AUB-501-J

•SIGNAL PATH

	VIDEO SIGNAL			AUDIO SIGNAL
	CHROMA	Y	Y/CHROMA	
REC			⇨	⇨
PB			⇨	⇨

FP-242, FP-584 (TAPE SENSORS) PRINTED WIRING BOARDS
— Ref. No. FP-242, FP-584 Board; 1,000 Series —
• Refer to page 4-77 for FP-242, FP-584 flexible board schematic diagram.

FP-584 BOARD

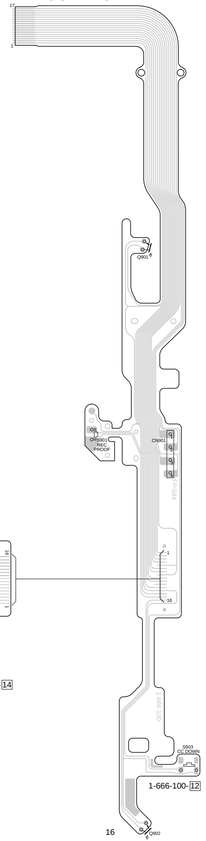

FP-242 BOARD

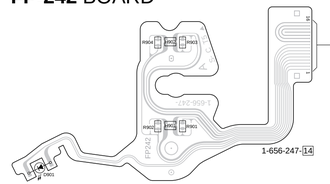

ECC, TBC, CHCD
RJ-77 (5/9)

TAPE SENSORS
FP-242, FP-584

RJ-77 BOARD (6/9)
REC/PB

⑬ IC1900 ②,③ (R1901)

⑭ IC1900 ⑫ (X1900)

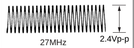

⑮ IC1900 ㉙ (L1902)

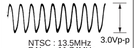

⑯ IC1900 ㉘,㉙ (R1914)

⑰ IC1900 ㊽ (L1901)

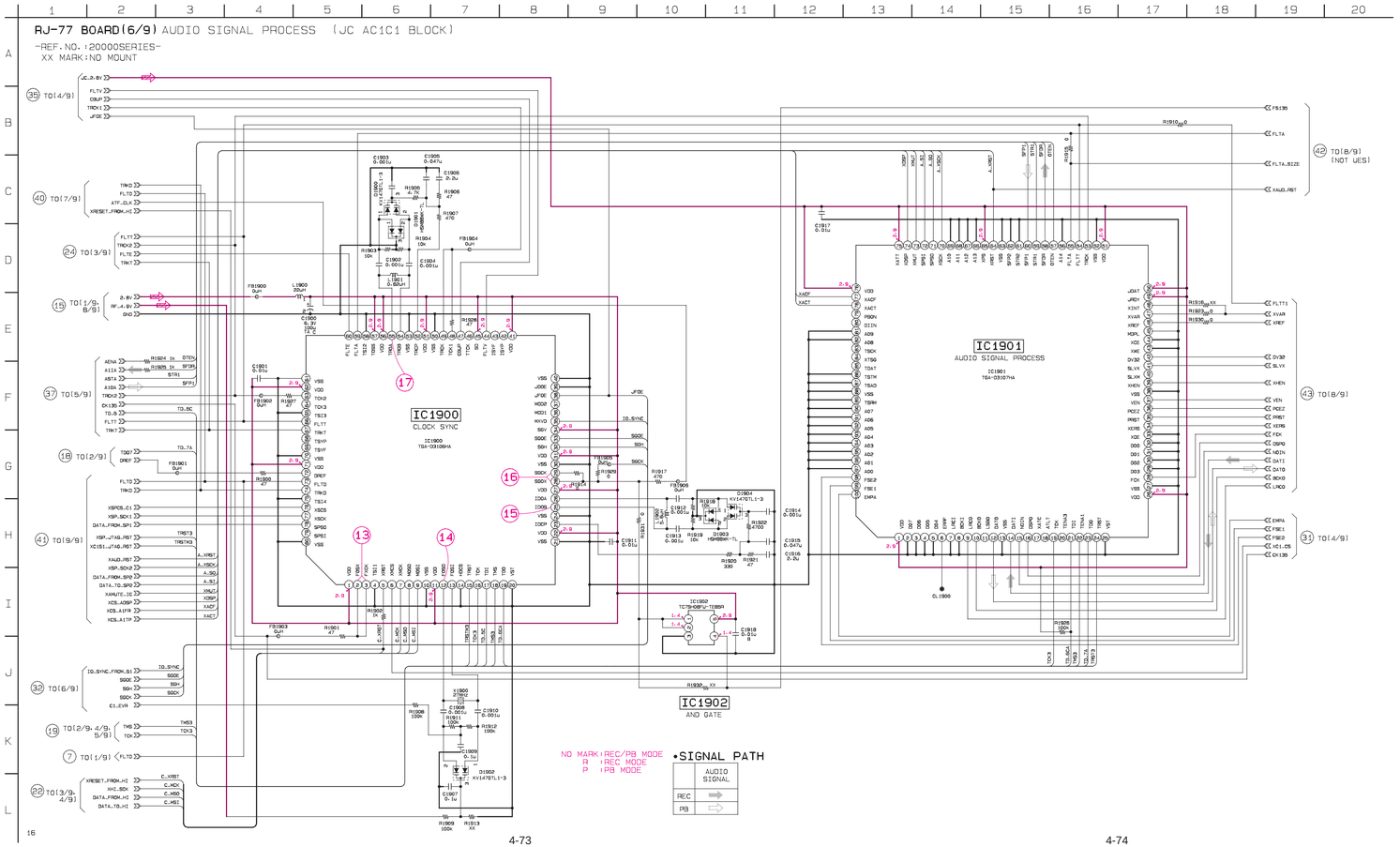

- Refer to page 4-48 for RJ-77 BOARD printed wiring board.
- Refer to page 4-70 for FP-242, FP-584 printed wiring boards.
- Refer to page 4-78 for RJ-77 BOARD (7/9) waveforms.

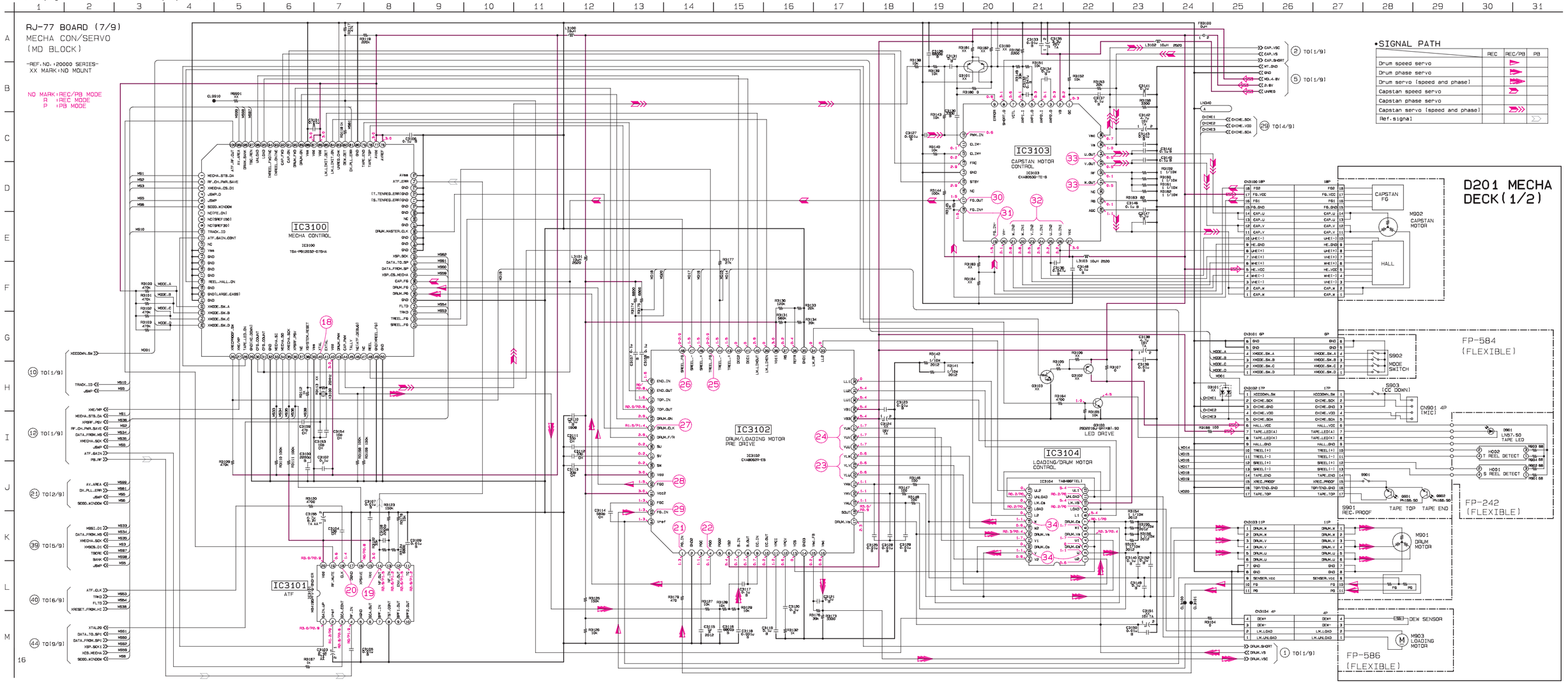

MECHA CON/SERVO
RJ-77 (7/9)

RJ-77 BOARD (7/9)

⑱ IC3100 ㊵ (X3100) REC/PB 20MHz 2.6Vp-p	㉕ IC3102 ㊺ REC/PB 0.56sec 2.7Vp-p NTSC	㉚ IC3103 ⑰ REC/PB 0.92msec 2.9Vp-p
⑲ IC3101 ⑭ PB 13.2msec 1Vp-p	㉕ IC3102 ㊺ REC/PB 0.36sec 2.8Vp-p PAL	㉛ IC3103 ⑱,⑲ REC/PB 0.92msec 40mVp-p
⑳ IC3101 ⑱ PB 13.5MHz 280mVp-p	㉖ IC3102 ㊽ REC/PB 0.76sec 2.7Vp-p NTSC	㉜ IC3103 ㉑-㉘ REC/PB 80msec 40mVp-p
㉑ IC3102 ① REC/PB 6.7msec 20mVp-p	㉖ IC3102 ㊽ REC/PB PAL 0.86sec 2.8Vp-p	㉝ IC3103 ㉛,㉝,㉞ REC/PB 80msec 0.8Vp-p
㉒ IC3102 ④ REC/PB 6.7msec 2.9Vp-p	㉗ IC3102 ㊹ REC/PB 3µsec 2.9Vp-p	㉞ IC3104 ②,⑱,㉓ REC/PB 1.1msec 2.2Vp-p
㉓ IC3102 ㉒,㉓,㉔ REC/PB 1.1msec 0.1Vp-p	㉘ IC3102 ㊿ REC/PB 1.1msec 2.9Vp-p 900Hz	
㉔ IC3102 ㉕,㉖,㉗ REC/PB 1.1msec 2.1Vp-p	㉙ IC3102 ㊸ REC/PB 1.1msec 0.23Vp-p 900Hz	

RJ-77 BOARD (8/9)

REC/PB

㉟ IC7903 ㉑ (R7912) 24.576MHz NTSC : 1.1Vp-p PAL : 1.5Vp-p	㊱ IC7903 ㉔ (R7903) 24.576MHz 2.2Vp-p	㊲ IC7903 ㊱ (R7939) 2.4Vp-p NTSC : REC 31.3MHz PB 24.57MHz PAL : REC 31.9MHz PB 26.1MHz

• See page 4-48 for RJ-77 BOARD printed wiring board.

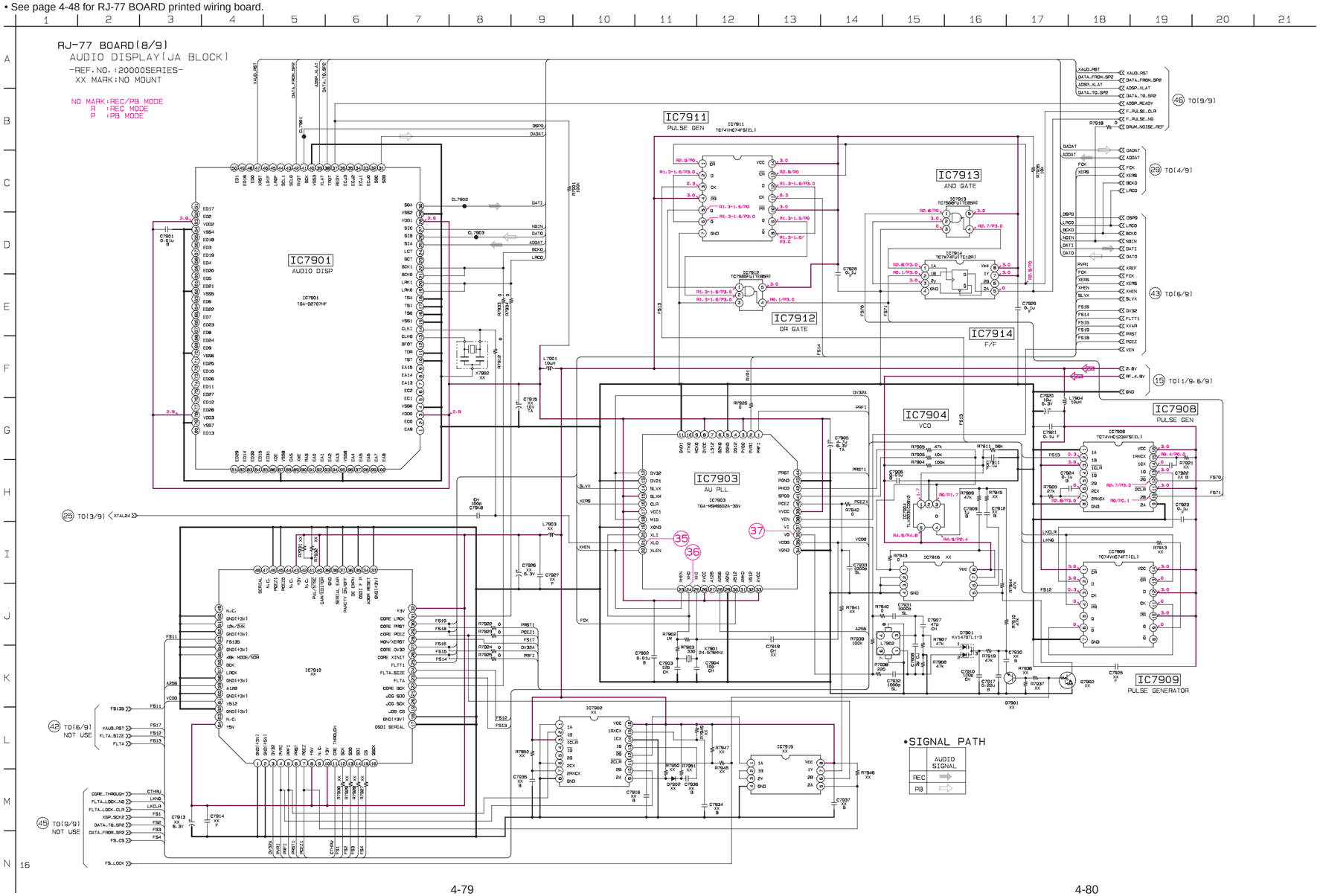

• See page 4-48 for RJ-77 BOARD printed wiring board.

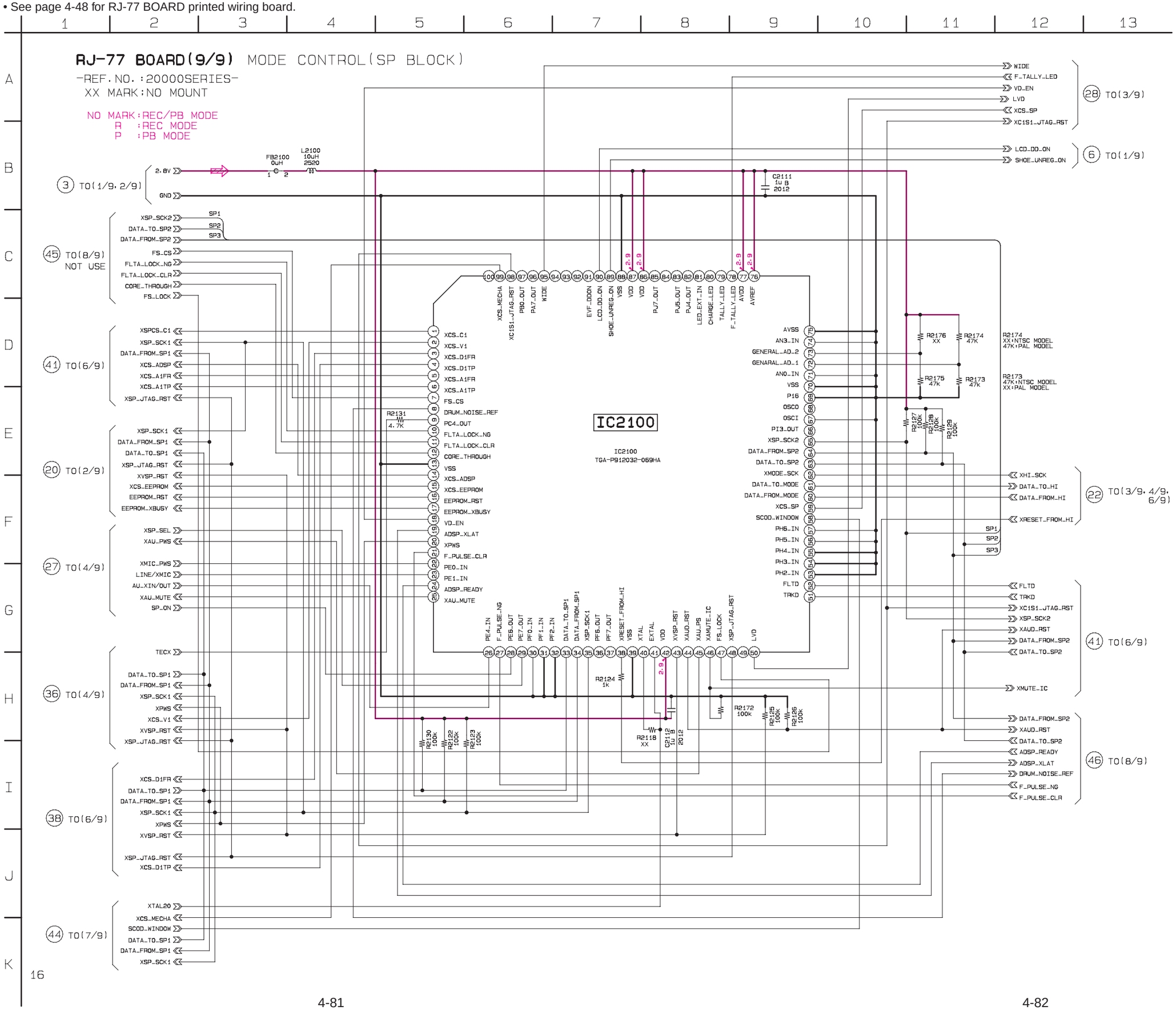

IO-62 BOARD

C101	B-7		
C102	B-6	J102	E-6
C103	B-6	J103	E-3
C104	B-6		
C107	B-6	L101	A-5
C110	A-5	L102	B-7
C112	A-5	L103	B-6
C113	B-2	L104	A-6
C114	B-3	L105	B-2
C115	B-2	L106	B-1
C116	A-6	L107	B-2
C117	B-1	L107	B-2
C118	B-2	L108	B-1
C119	B-1		
C120	B-1	R101	B-6
C121	B-2	R102	B-6
C122	B-2	R105	B-6
C123	B-1	R110	B-2
C124	B-1	R111	B-3
		R112	B-2
CN103	C-2	R119	A-6
CN104	B-1	R120	B-3
CN105	F-7	R121	B-3
CN106	A-3	R122	A-6
		R123	A-3
D101	A-6	R124	B-3
D102	A-3	R125	A-3
D103	E-6	R126	A-3
D104	A-5	R127	A-2
D105	B-2	R128	A-2
D106	B-3	R129	A-2
D107	B-3	R130	A-2
D108	B-3	R131	A-2
D109	F-6	R132	A-6
D110	B-3	R133	A-7
D111	A-7	R134	A-7
D112	A-7		
D113	B-2	S101	A-6
D114	B-2	S102	A-5
D115	B-1	S103	A-3
D116	B-1	S104	A-2
D117	B-1	S105	A-2
D118	B-2	S106	A-1
		S107	A-4
FB101	F-6	S108	F-4

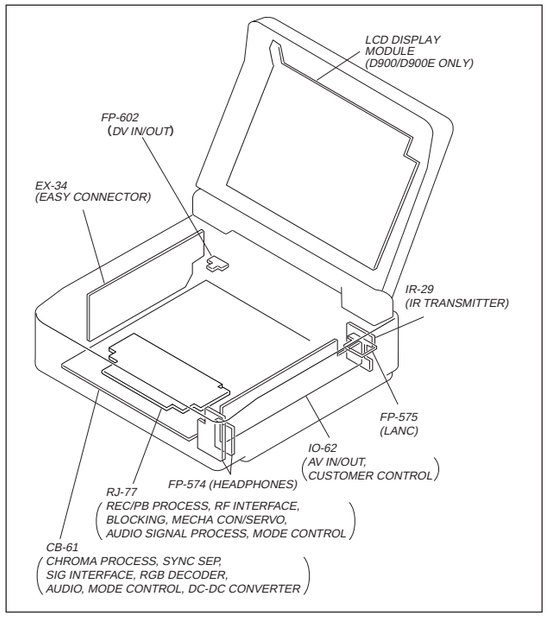
LCD DISPLAY MODULE (D900/D900E ONLY)
FP-602 (DV IN/OUT)
EX-34 (EASY CONNECTOR)
IR-29 (IR TRANSMITTER)
FP-575 (LANC)
IO-62 (AV IN/OUT, CUSTOMER CONTROL)
FP-574 (HEADPHONES)
RJ-77 (REC/PB PROCESS, RF INTERFACE, BLOCKING, MECHA CON/SERVO, AUDIO SIGNAL PROCESS, MODE CONTROL)
CB-61 (CHROMA PROCESS, SYNC SEP, SIG INTERFACE, RGB DECODER, AUDIO, MODE CONTROL, DC-DC CONVERTER)

IO-62 (AV IN/OUT) PRINTED WIRING BOARD

— Ref. No. IO-62 Board; 3,000 Series —

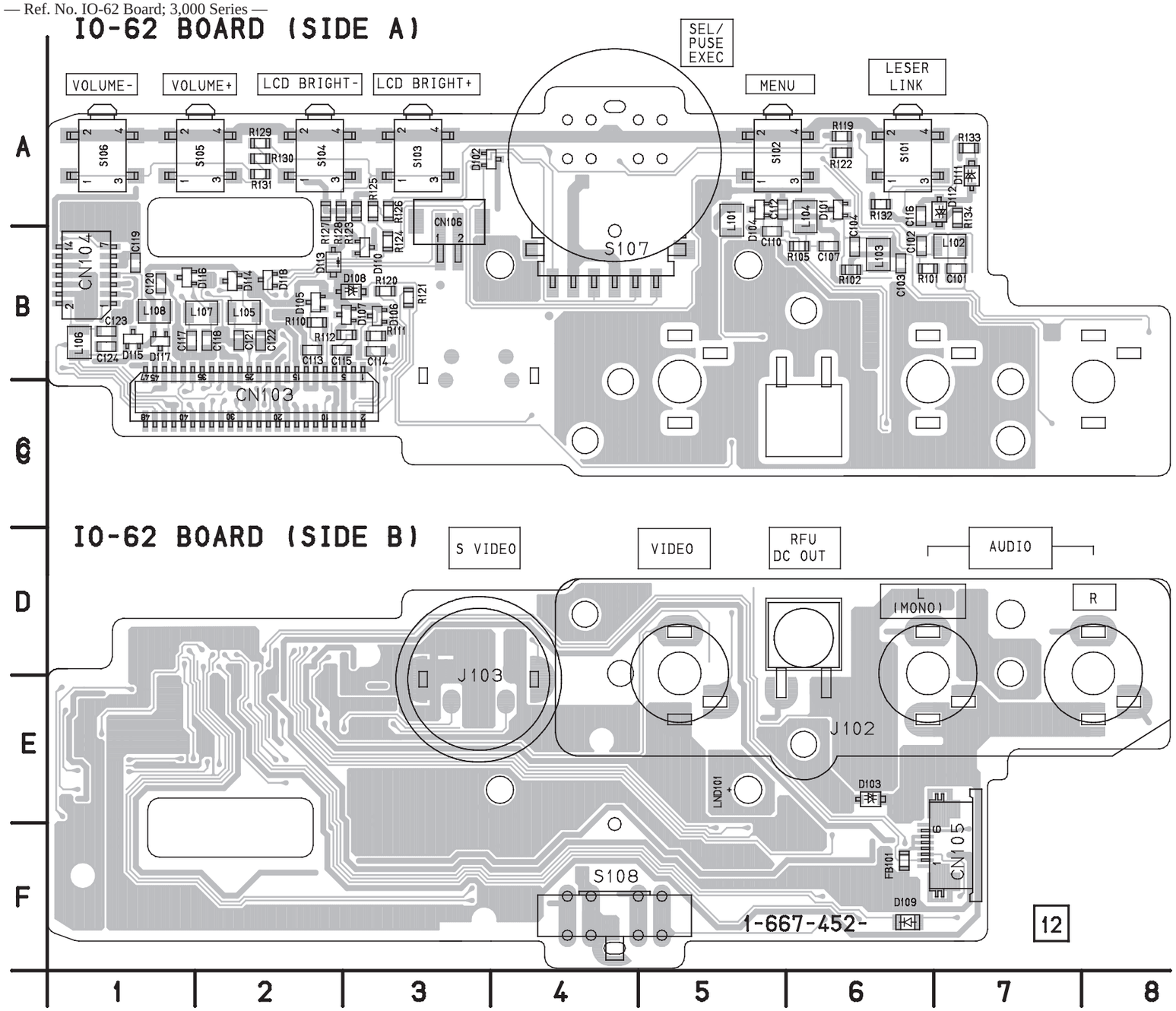

There are few cases that the part printed on this diagram isn't mounted in this model.

For printed wiring boards

- Chip parts.

Diode

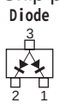

- This board is four-layer printed board. However the patterns of layers two to three have not been included in the diagram.

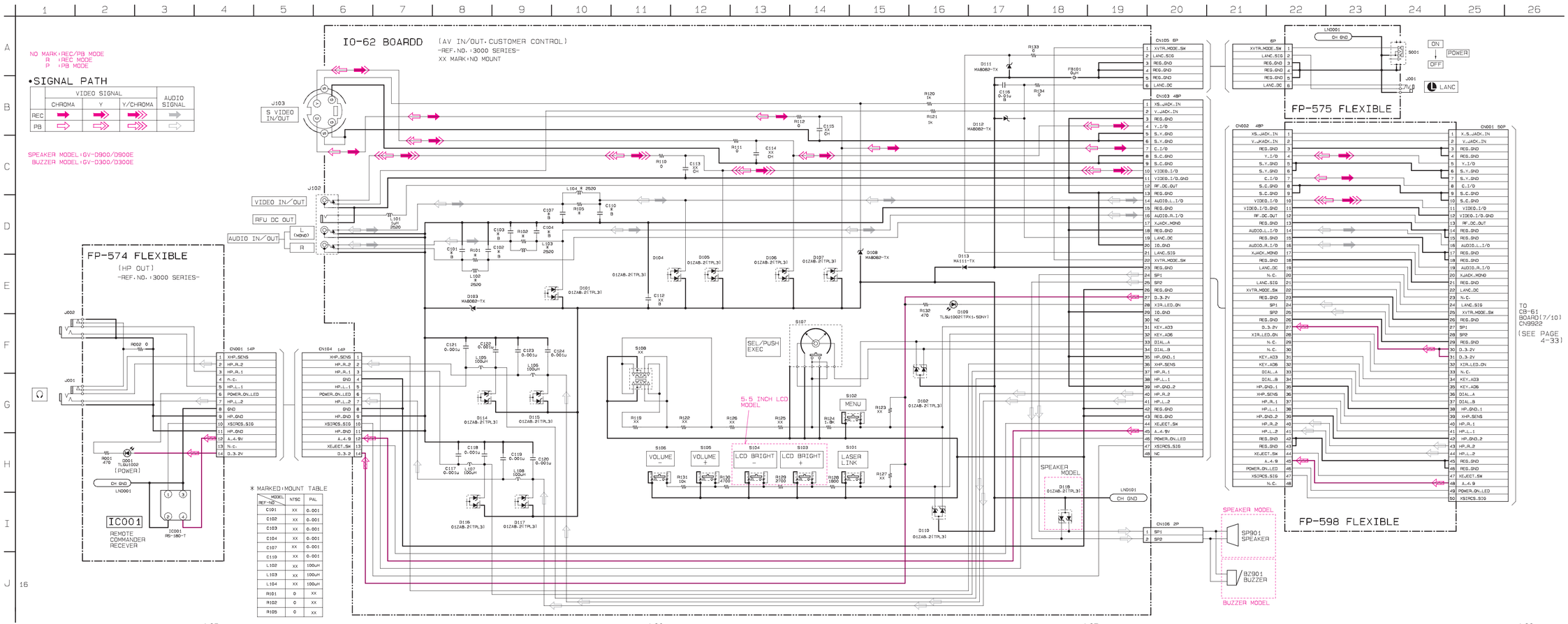

REF-NO \ MODEL	NTSC	PAL
C101	XX	0.001
C102	XX	0.001
C103	XX	0.001
C104	XX	0.001
C107	XX	0.001
C110	XX	0.001
L102	XX	100uH
L103	XX	100uH
L104	XX	100uH
R101	0	XX
R102	0	XX
R105	0	XX

NO MARK:REC/PB MODE
R :REC MODE
P :PB MODE

•SIGNAL PATH

	VIDEO SIGNAL			AUDIO SIGNAL
	CHROMA	Y	Y/CHROMA	
REC	→	→	⇒	⇨
PB			⇒	⇨

Note:
The components identified by mark ⚠ or dotted line with mark ⚠ are critical for safety. Replace only with part number specified.

Note:
Les composants identifiés par une marque ⚠ sont critiques pour la sécurité. Ne les remplacer que par une pièce portant le numéro spécifié.

5.5 INCH LCD MODEL:GV-D900/900E

EASY CONNECTOR

CN204 20P
VIDEO_OUT 1
VIDEO_OUT_GND 2
V/Y_IN 3
VIDEO_IN_GND 4
AUDIO_R_IN 5
AUDIO_L_IN 6
AUDIO_IN_GND 7
LANC_SIG 8
IO_GND 9
LANC_GND 10
ID1 11
ADI_GND 12
ADI_GND 13
AUDIO_R_OUT 14
AUDIO_L_OUT 15
AUDIO_OUT_GND 16
ID2 17
ADI_UNREG 18
ADI_UNREG 19
C_IN 20

D204 01Z4.8-2(TPL3)
D205 01Z4.8-2(TPL3)

FP-570 FLEXIBLE

40P			40P
VIDEO_GND	1	1	VIDEO_GND
V/Y_IN	2	2	V/Y_IN
V/Y_IN_GND	3	3	V/Y_IN_GND
AUDIO_R_IN	4	4	AUDIO_R_IN
AUDIO_IN_GND	5	5	AUDIO_IN_GND
AUDIO_L_IN	6	6	AUDIO_L_IN
AUDIO_IN_GND	7	7	AUDIO_IN_GND
LANC_SIG	8	8	LANC_SIG
LANC_GND	9	9	LANC_GND
ID1	10	10	ID1
ID2	11	11	ID2
VIDEO_GND	12	12	VIDEO_GND
VIDEO_OUT	13	13	VIDEO_OUT
VIDEO_OUT_GND	14	14	VIDEO_OUT_GND
AUDIO_R_OUT	15	15	AUDIO_R_OUT
AUDIO_OUT_GND	16	16	AUDIO_OUT_GND
AUDIO_L_OUT	17	17	AUDIO_L_OUT
AUDIO_OUT_GND	18	18	AUDIO_OUT_GND
C_IN	19	19	C_IN
VIDEO_GND	20	20	VIDEO_GND
IO_GND	21	21	IO_GND
IO_GND	22	22	IO_GND
ADI_UNREG	23	23	ADI_UNREG
ADI_UNREG	24	24	ADI_UNREG
ADI_UNREG	25	25	ADI_UNREG
ADI_UNREG	26	26	ADI_UNREG
ADI_GND	27	27	ADI_GND
ADI_GND	28	28	ADI_GND
ADI_GND	29	29	ADI_GND
ADI_GND	30	30	ADI_GND
BL_GND	31	31	BL_GND
BL_GND	32	32	BL_GND
BL_GND	33	33	BL_GND
BL_UNREG	34	34	BL_UNREG
BL_UNREG	35	35	BL_UNREG
BL_UNREG	36	36	BL_UNREG
LEL	37	37	LEL
LEH	38	38	LEH
LCD_4.9V	39	39	LCD_4.9V
BL_LEV	40	40	BL_LEV

TO CB-61 BOARD(6/10) CN9931
(SEE PAGE 4-29)

CN203 40P
VIDEO_GND 1
V/Y_IN 2
V/Y_IN_GND 3
AUDIO_R_IN 4
AUDIO_R_IN_GND 5
AUDIO_L_IN 6
AUDIO_L_IN_GND 7
LANC_SIG 8
LANC_GND 9
ID1 10
ID2 11
VIDEO_GND 12
VIDEO_OUT 13
VIDEO_OUT_GND 14
AUDIO_R_OUT 15
AUDIO_R_OUT_GND 16
AUDIO_L_OUT 17
AUDIO_L_OUT_GND 18
C_IN 19
VIDEO_GND 20
IO_GND 21
IO_GND 22
ADI_UNREG 23
ADI_UNREG 24
ADI_UNREG 25
ADI_UNREG 26
ADI_GND 27
ADI_GND 28
ADI_GND 29
ADI_GND 30
BL_GND 31
BL_GND 32
BL_GND 33
BL_UNREG 34
BL_UNREG 35
BL_UNREG 36
LEL 37
LEH 38
LCD_4.9V 39
BL_LEV 40

EX-34 BOARD (DC/AC CONVERTER)

-REF.NO.:3000 SERIES-
XX MARK:NO MOUNT

L201 4.7uH
Q209 2SD2216J-GR(TX1.SO INVERTER SWITCHING
Q210 FP102-TL +B SWITCHING
L202 22uH
L203 100uH
R204 270 1/10W 2012
R207 270 1/10W 2012
T201 DC/AC INVERTER TRANSFORMER
C207 220u 16V A
C208 0.01u 1608
R223 470 1/16W 1608
R224 100 1/16W 1608
C209 10p CH 1608
R225 390 1/16W 1608
C210 27p CH 1608
C200 0.47u B 2012
C216 0.1
C213 0.1
C214 0.1
C215 0.1 50V
C218 0.47u B 2012
C211 0.01u 1608
C212 47u 10V C
Q211 FP211-TL HV OSC
LND201 SHIELD_GND
LND202 SHIELD_GND
LND203 SHIELD_GND
LND204 SHIELD_GND
D203 MA111-TX
R216 XX
IC201 DC/AC CONVERTER
R207 47k
R206 6800 ±0.5%
R205 120k ±0.5%
Q203 UN9213J-(K8).SO +B SWITCH
Q212 UN9111J-(K8).SO SWITCH
R222 120
C205 1u 2012
IC201 TL5001CDR
C204 0.01u 1608 B
R203 4700 1/16W 1608
R208 1500 ±0.5% 1608
Q205-207 CURRENT LIMITTER
R213 10k
R214 100k
IC202 AMP
Q208 UN9213J-(K8).SO ON/OFF SWITCH
Q205 2SD2216J-GR(TX1.SO
Q206 2SD2216J-GR(TX1.SO
IC202 TA75S393F-TE85R
Q202 MA111-TX
R217 22k
C206 0.1u B 2012
R218 470
Q202 UN9213J-(K8).SO +B ON/OFF SWITCH
R219 120 1/16W ±0.5% 1608
R210 2700 ±0.5% 1/16W
R209 1500 1/16W 1608
R212 4700 1/16W 1608
C201 1u 2-2u TA
C202 1u 2012
R201 ±0.5% 1/16W
R202 27k ±0.5% 1608 1/16W
Q201 UN9213J-(K8).SO DISCHARGE SW
Q204 UN9213J-(K8).SO SWITCH
Q207 UN9213J-(K8).SO
R215 10k
R220 XX

5.5 INCH LCD MODEL

LCD901
5.5-inch LCD UNIT

FP-569 FLEXIBLE

20P			32P
LEH(COMP)	1	1	LEH(COMP)
LEL/H.POS	2	2	LEL/H.POS
GND	3	3	GND
VR	4	4	VR
VG	5	5	VG
VB	6	6	VB
GND	7	7	GND
GND	8	8	GND
V_COMP(P_COM)	9	9	V_COMP(P_COM)
N/PB(NTSC)	10	10	N/PB(NTSC)
FRM(FRMV)	11	11	FRM(FRMV)
HOB(HSY)	12	12	HOB(HSY)
VOB	13	13	VOB
GVD/P15	14	14	GVD/P15
WHD/MUT	15	15	WHD/MUT
CSYNC(SYNC)	16	16	CSYNC(SYNC)
VRV(V_REV)	17	17	VRV(V_REV)
HRV(H_REV)	18	18	HRV(H_REV)
W_MODE	19	19	W_MODE
W_MSK	20	20	W_MSK
GND	21	21	GND
VPH	22	22	VPH
VDD	23	23	VDD
VSL	24	24	VSL(-7.5
VGH	25	25	VGH
VGL	26	26	VGL
		27	BL_UNREG
		28	BL_UNREG
		29	BL_UNREG
		30	BL_UNREG.GND
		31	BL_UNREG.GND
		32	BL_UNREG.GND

TO CB-61 BOARD(5/10) CN9923
(SEE PAGE 4-28)

CN201 2P
2 BL_HIGH
1 BL_LOW

FP-51 HARNNES

2P
BL_HIGH 1
BL_LOW 2

ND901 BACK LIGHT

EX-34 (MULTI CONNECTOR, BACK LIGHT POWER) PRINTED WIRING BOARD

— Ref. No. EX-34 Board; 3,000 Series —

EX-34 BOARD (SIDE A)

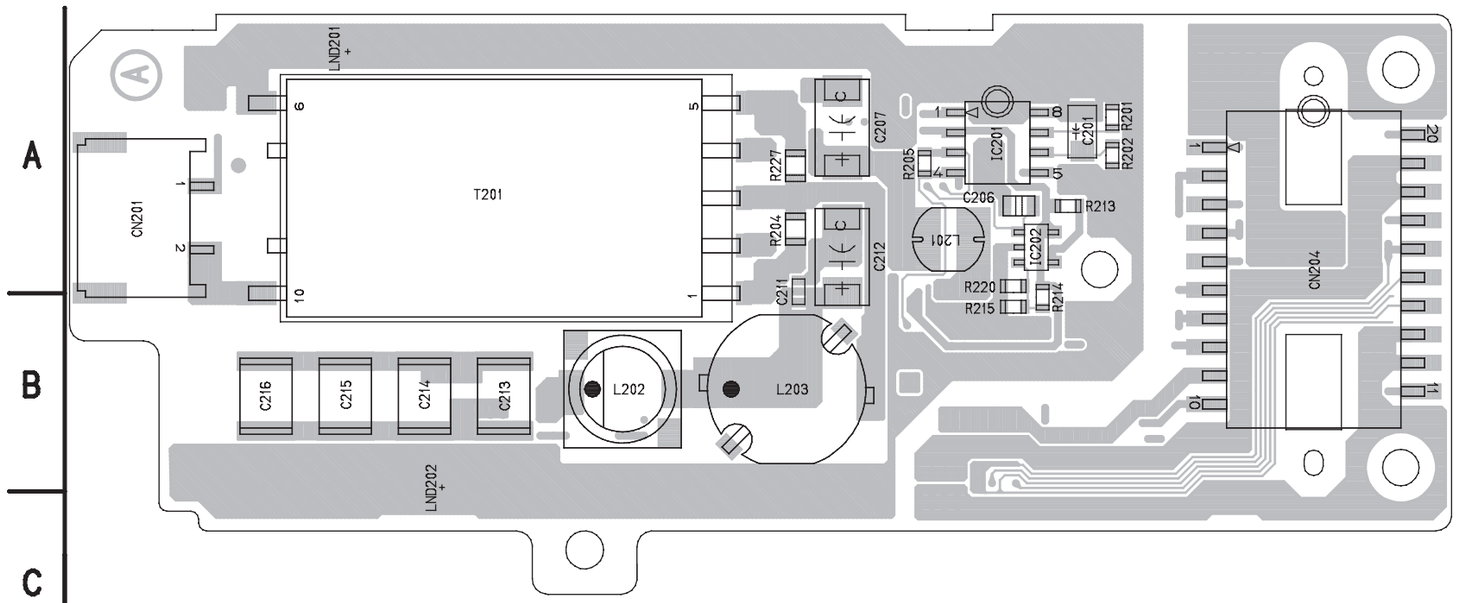

EX-34 BOARD (SIDE B)

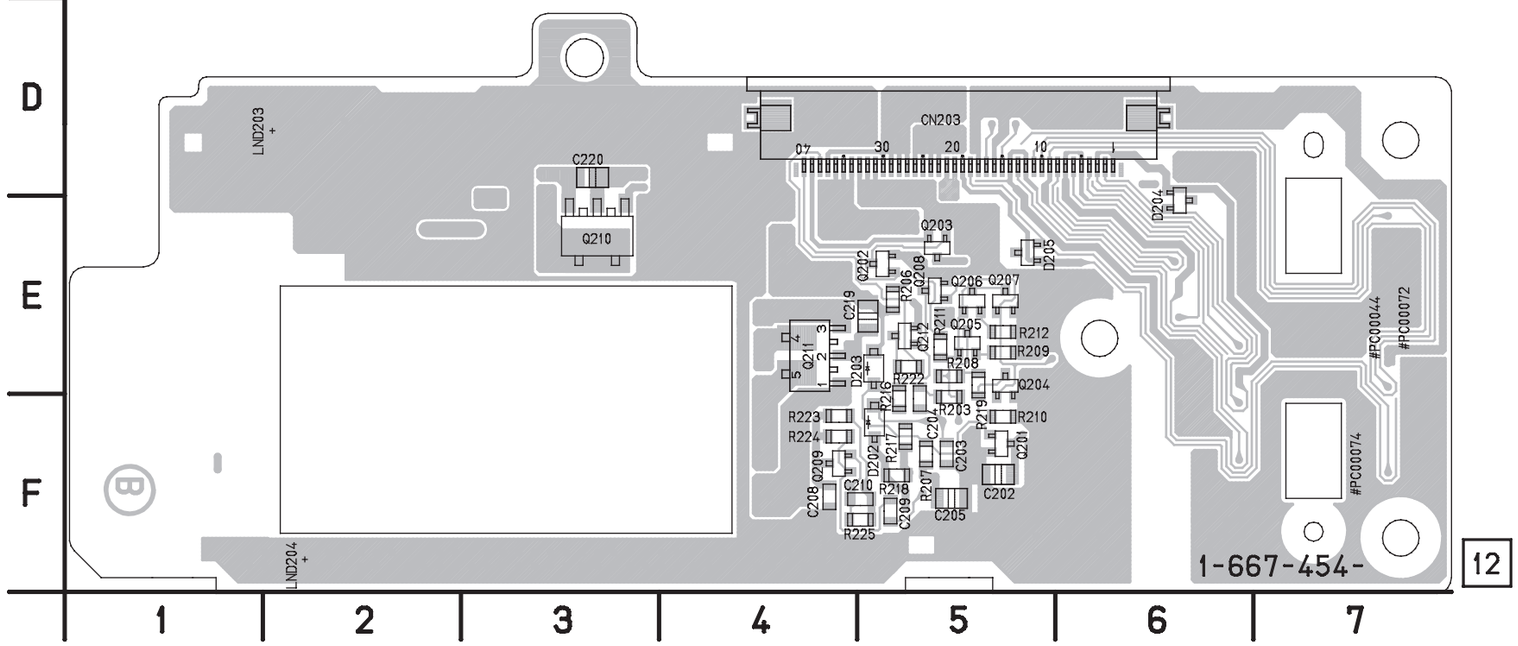

There are few cases that the part printed on this diagram isn't mounted in this model.

EX-34 BOARD

C201	A-6	Q203	E-5
C202	F-5	Q204	E-5
C203	F-5	Q205	E-5
C204	F-5	Q206	E-5
C205	F-5	Q207	E-5
C206	A-5	Q208	E-5
C207	A-4	Q209	F-4
C208	F-4	Q210	E-3
C209	F-5	Q211	E-4
C210	F-5	Q212	E-5
C211	B-4		
C212	A-4	R201	A-6
C213	B-3	R202	A-6
C214	B-2	R203	F-5
C215	B-2	R204	A-4
C216	B-2	R205	A-5
C219	E-5	R206	E-5
C220	D-3	R207	F-5
		R208	E-5
CN201	A-1	R209	E-5
CN203	D-5	R210	F-5
CN204	A-7	R211	E-5
		R212	E-5
D202	F-5	R213	A-6
D203	E-5	R214	B-5
D204	E-6	R215	B-5
D205	E-5	R216	F-5
		R217	F-5
IC201	A-5	R218	F-5
IC202	A-5	R219	E-5
		R220	A-5
L201	A-5	R222	E-5
L202	B-3	R223	F-4
L203	B-4	R224	F-4
		R225	F-5
Q201	F-5	R227	A-4
Q202	E-5	T201	A-3

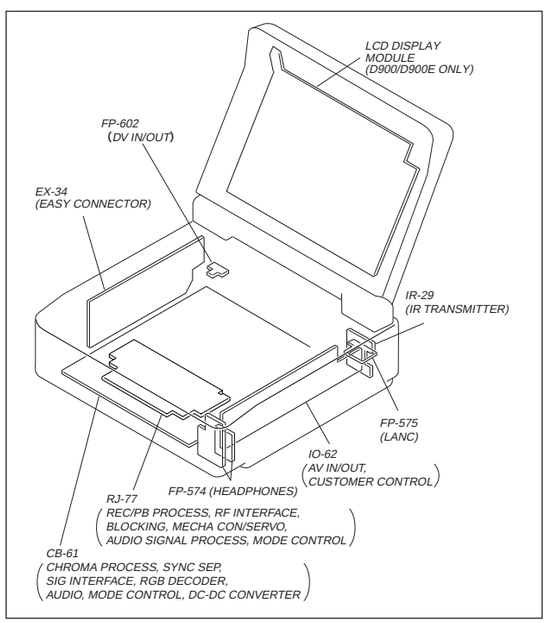
LCD DISPLAY MODULE (D900/D900E ONLY)
FP-602 (DV IN/OUT)
EX-34 (EASY CONNECTOR)
IR-29 (IR TRANSMITTER)
FP-575 (LANC)
IO-62 AV IN/OUT, CUSTOMER CONTROL
FP-574 (HEADPHONES)
RJ-77 REC/PB PROCESS, RF INTERFACE, BLOCKING, MECHA CON/SERVO, AUDIO SIGNAL PROCESS, MODE CONTROL
CB-61 CHROMA PROCESS, SYNC SEP, SIG INTERFACE, RGB DECODER, AUDIO, MODE CONTROL, DC-DC CONVERTER

For printed wiring boards

- Chip parts.

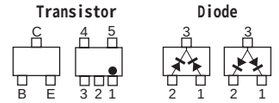

- This board is four-layer printed board. However the patterns of layers two to three have not been included in the diagram.

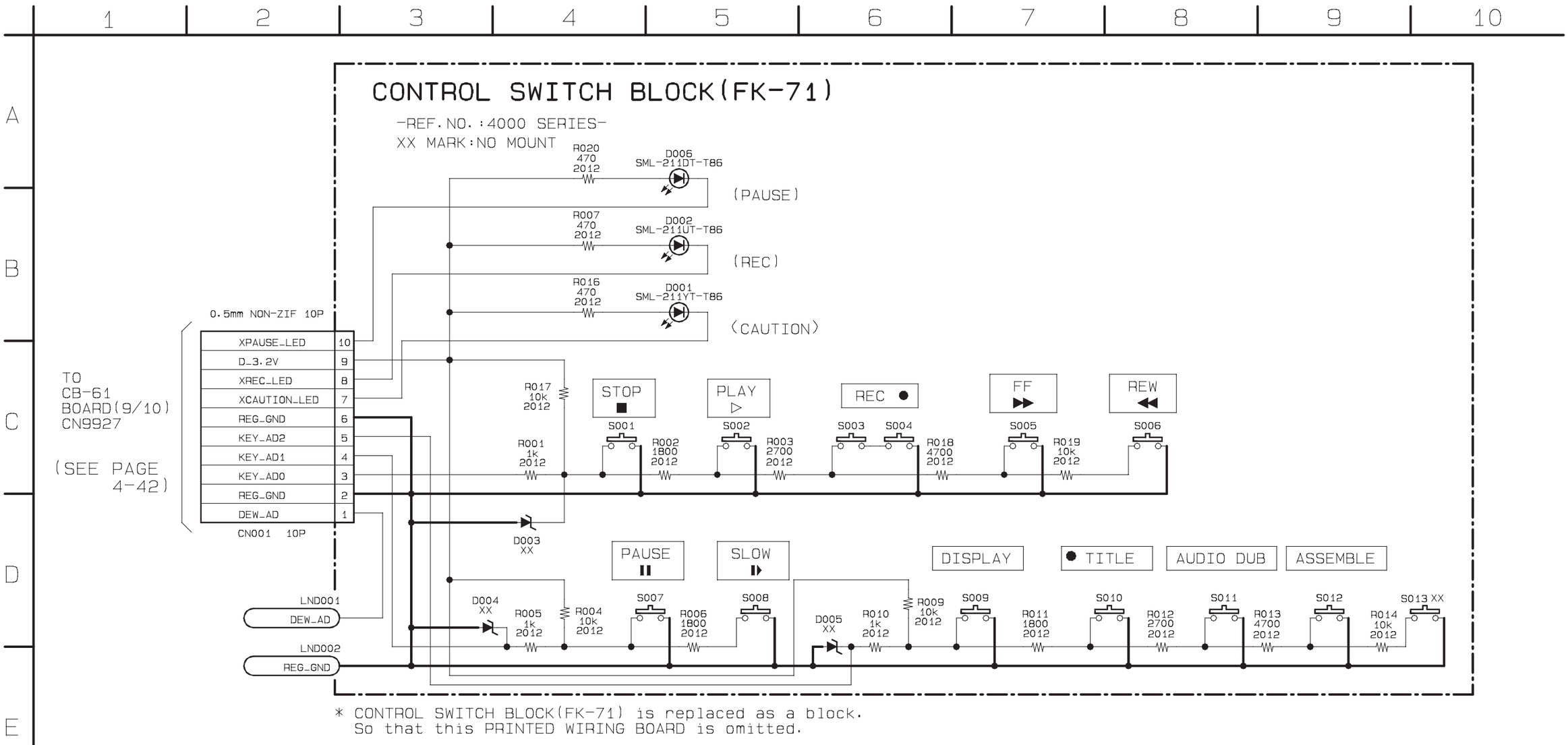

* CONTROL SWITCH BLOCK(FK-71) is replaced as a block.
So that this PRINTED WIRING BOARD is omitted.

SECTION 5
ADJUSTMENTS

5-1. ADJUSTMENT PREPARATIONS

Refer to section "5-4. SERVICE MODE" for the adjustment remote commander.

With 5.5-inch LCD panel : GV-D900/D900E
Without 5.5-inch LCD panel : GV-D300/D300E

1-1. PREPARATIONS BEFORE ADJUSTMENT

1-1-1. List of Service Tools

- Oscilloscope
- Regulated power supply
- Vectorscope
- Frequency counter
- Adjustment screwdriver
- Monitor TV
- Digital voltmeter
- Pattern signal generator

Ref. No.	Name	Parts Code	Usage
J-1	Adjustment remote commander (RM-95 upgraded). Note	J-6082-053-B	
J-2	CPC-6 jig	J-6082-370-A	For adjusting the video section
J-3	CPC-6 terminal board jig	J-6082-371-A	For adjusting the video section
J-4	Power cable	J-6082-223-A	For correction between the battery terminal and DC power supply unit
J-5	IR receiver jig	J-6082-383-A	For adjusting the IR transmitter
J-6	Extension cable (80P, 0.5mm)	J-6082-421-A	For extension between the CB-61 board (CN9921) and the RJ-77 board (CN9901)
J-7	Extension cable (50P, 0.5mm → 48P, 0.8mm)	J-6082-422-A	For extension between the CB-61 board (CN9930) and the RJ-77 board (CN9904)
J-8	Extension cable (18P, 0.5 mm)	J-6082-423-A	For extension between the RJ-77 board (CN3100) and capstan motor
J-9	CPC-10 jig	J-6082-424-A	For adjusting the LCD system

Note: If the microprocessor IC in the adjustment remote commander is not the new microprocessor (UPD7503G-C56-12), the pages cannot be switched. In this case, replace the IC with the new microprocessor (8-759-148-35).

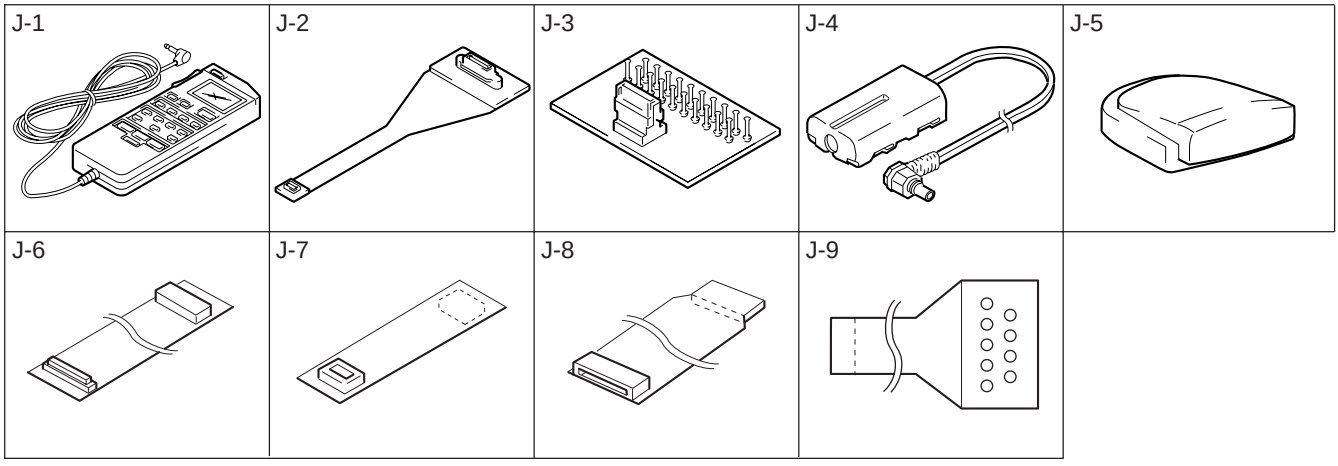

Fig. 5-1-1.

5-2. MECHANISM SECTION ADJUSTMENT

For details of mechanism section adjustments, checks, and replacement of mechanism parts, refer to the separate volume "DV MECHANICAL ADJUSTMENT MANUAL Ⅰ D Mechanism and DV MECHANICAL ADJUSTMENT MANUAL Ⅲ D200 Mechanism".

2-1. OPERATING WITHOUT CASSETTE

1) Refer to "2. Removal" and supply the power with the cabinet assembly removed.
2) Connect the adjustment remote commander to the LANC jack.
3) Turn on the HOLD switch of the adjustment remote commander.
4) Close the cassette compartment without the cassette.
5) Select page: 0, address: 01, and set data: 01.
6) Select page: C, address: 52, and set data: FD, and press the PAUSE button of the adjustment remote commander.
7) Select page: D, address: 10, and set data: 10, and press the PAUSE button of the adjustment remote commander.
8) Turn off the HOLD switch of the adjustment remote commander.
9) Turn the power off and then on.

The above procedure enables the mechanism to operate without the cassette. After checking operations be sure to perform "Procedure After Checking Operations".
To use the "No-Cassette Operation Mode" and "Forced Power ON Mode" together, set the following data to page: D, address:10.
Forced power ON mode 12

[Procedure after checking operations]

1) Select page: 0, address: 01, and set data: 01.
2) Select page: C, address: 52, and set data: FF, and press the PAUSE button of the adjustment remote commander.
3) Select page: D, address: 10, and set data: 00, and press the PAUSE button.
4) Select page: 0, address: 01, and set data: 00.
5) Disconnect the power supply of the unit.

2-2. TAPE PATH ADJUSTMENT

1. Preparations for Adjustment

1) Clean the tape running side (tape guide, drum, capstan shaft, pinch roller).
2) Connect the adjustment remote commander to the LANC jack.
3) Turn on the HOLD switch of the adjustment remote commander.
4) Select page: 3, address: 3C, and set data: 07 (NTSC), 27 (PAL).
5) Connect the oscilloscope.
   Channel 1: CB-61 board, CN9928 Pin ⑭ (RF MONITOR) (Note 1)
   External trigger: CB-61 board, CN9928 Pin ⑯
   Note 1: Connect the oscilloscope via CPC-6 jig (J-6082-370-A), CPC- 6 terminal board jig (J-6082-371-A).
   Note 2: Connect Pins ⑭ and ⑬ (GND) of CN9928 with a 75 Ω resistor.
6) Playback an alignment tape (XH2-1) for tracking.
7) Check that the oscilloscope RF waveform is flat at the entrance and exit. If not flat, adjust according to the separate volume "DV MECHANICAL ADJUSTMENT MANUAL Ⅰ D Mechanism and DV MECHANICAL ADJUSTMENT MANUAL Ⅲ D200 Mechanism".
8) After completing the adjustment, perform "2. Procedure after checking operations".

CN9928 of CB-61 board

Pin No.	Signal Name	Pin No.	Signal Name
1	DEC FSC	2	GND
3	GND	4	XCHG
5	ENV OUT	6	GND
7	LOCK	8	RF OUT
9	VCC1	10	EQ IN
11	VCC2	12	AGC IN
13	GND	14	RF MONITOR
15	GND	16	JSWP
17	DEC B-Y	18	DEC R-Y
19	CPC VGL –18V	20	AFC ERR

[Procedure after operations]

1) Connect the adjustment remote commander, and turn on the HOLD switch.
2) Select page: 3, address: 3C, and set data: 00.
3) Disconnect the power supply of the unit.

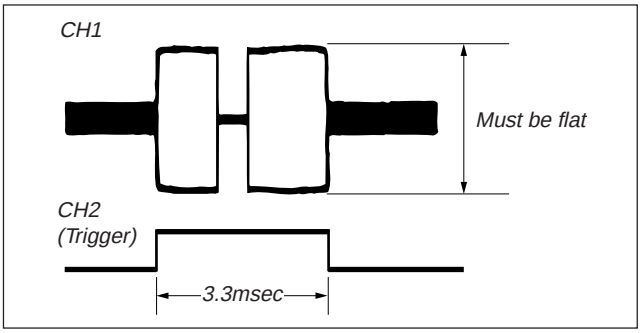

Fig. 5-2-1

5-3. ELECTRICAL ADJUSTMENTS

For details of the adjustment remote commander, refer to "5-4. SERVICE MODE".

NTSC model : GV-D300/D900
PAL model : GV-D300E/D900E

3-1. PREPARATIONS BEFORE ADJUSTMENTS

Use the following measuring instruments for video section adjustments.

3-1-1. Equipment Required

1) TV monitor
2) Oscilloscope (dual-phenomenon, band above 30 MHz with delay mode) (Unless specified otherwise, use a 10 : 1 probe.)
3) Frequency counter
4) Pattern generator with video output terminal
5) Digital video camera recorder
   DCR-VX1000 (NTSC)
   DCR-VX1000E (PAL)
6) Vectorscope
7) Digital voltmeter
8) Audio generator
9) Audio level meter
10) Audio distortion meter
11) Audio attenuator
12) Regulated power supply
13) Alignment tapes
    - Tracking standard (XH2-1)
      Parts code: 8-967-997-01
    - SW/OL standard (XH2-3)
      Parts code: 8-967-997-11
    - Audio operation check for NTSC (XH5-3)
      Parts code: 8-967-997-51
    - System operation check for NTSC (XH5-5)
      Parts code: 8-967-997-61
    - BIST check for NTSC (XH5-6)
      Parts code: 8-967-997-71
    - Audio operation check for PAL (XH5-3P)
      Parts code: 8-967-997-55
    - System operation check for PAL (XH5-5P)
      Parts code: 8-967-997-66
    - BIST check for PAL (XH5-6P)
      Parts code: 8-967-997-76
14) Adjustment remote commander (J-6082-053-B)
15) IR receiver jig (J-6082-383-A)
16) CPC-6 jig (J-6082-370-A)
17) CPC-6 terminal board jig (J-6082-371-A)
18) Extension cable (50P, 0.5 mm — 48P, 0.8mm)
    For extension between the CB-61 board (CN9930) and the RJ-77 board (CN9904) (J-6082-422-A)
19) Extension cable (80P, 0.5 mm)
    For extension between the CB-61 board (CN9921) and the RJ-77 board (CN9901) (J-6082-421-A)
20) Extension cable (18P, 0.5 mm)
    For extension between the RJ-77 board (CN3100) and the capstan motor. (J-6082-423-A)
21) CPC-10 jig (J-6082-424-A)

3-1-2. Precautions on adjusting

1) Removing the CB-61 board CN9926 means removing the lithium 3V power supply (FP-571 board BT001) , data such as date, time, user-set menus will be lost. After completing adjustments, reset these data. If the CB-61 board CN9926 has been removed, the self-diagnosis data, data on history of use (total drum rotation time etc.) will be lost. Before removing, note down the self-diagnosis data and the data on the history use (data of page: 2, address: 35 to 3D). (Refer to the "5-4. Service Mode" for the data on the history use.)
2) The LCD block and EASY connector need not be connected except during "Battery End Adjustment" and "LCD system Adjustments". To remove, disconnect the following connectors.
    1. CB-61 board CN9923 (32P, 0.5mm)
    2. CB-61 board CN9931 (40P, 0.5mm)
3) IR-29 board (PANEL CLOSE switch, LASER LINK transmitter) need not be connected except during "IR Transmitter Adjustment". To remove, disconnect the following connectors.
    1. CB-61 board CN9924 (10P, 0.5mm)
4) If opening the CB-61 board, use the following extension cable between the CB-61 board CN9921/CN9930 and RJ-77 board CN9901/CN9904.
    1. J-6082-421-A (80P, 0.5mm)
    2. J-6082-422-A (50P, 0.5mm — 48P, 0.8mm)
5) If opening the RJ-77 board, use the following extension cable between the RJ-77 board (CN3100) and capstan motor.
    1. J-6082-423-A (18P, 0.5mm)

Note 1: Setting the "Forced Power ON" mode

1) Select page: 0, address: 01, and set data: 01.
2) Select page: D, address: 10, set data: 02, and press the PAUSE button of the adjustment remote commander.

The above procedure will enable the VTR power to be turned on with the power switch block (FP-575) removed.
After completing adjustments, be sure to exit the "Forced Power ON mode".

Note 2: Exiting the "Forced Power ON" mode

1) Select page: 0, address: 01, and set data: 01.
2) Select page: D, address: 10, set data: 00, and press the PAUSE button of the adjustment remote commander.
3) Select page: 0, address: 01, and set data: 00.

3-1-3. Adjusting Connectors

Some of the adjusting points (except for that of the LCD system adjustments) are concentrated at CB-61 board CN9928 and CN9932. Connect the measuring instruments via the CPC-6 jig (J-6082-370-A) , CPC-6 terminal board jig (J-6082-371-A). The following tables list the pin numbers and signal names of CN9928 and CN9932.

CB-61 board CN9928

Pin No.	Signal Name	Pin No.	Signal Name
1	DEC FSC	2	GND
3	GND	4	XCHG
5	ENV OUT	6	GND
7	LOCK	8	RF OUT
9	VCC1	10	EQ IN
11	VCC2	12	AGC IN
13	GND	14	RF MONITOR
15	GND	16	JSWP
17	DEC B-Y	18	DEC R-Y
19	CPC VGL –18V	20	AFC ERR

CB-61 board CN9932

Pin No.	Signal Name	Pin No.	Signal Name
1	GND	2	GND
3	TDI	4	TDAA
5	TCK	6	TMS
7	GND	8	GND
9	GND	10	NPS C
11	GND	12	GND
13	NPS B-Y	14	NPS R-Y
15	GND	16	GND
17	NPS PLL	18	NPS Y
19	GND	20	GND

3-1-4. Connecting the Equipment

Connect the measuring instruments as shown in Fig. 5-3-1 according to the input terminal (VIDEO jack input or DV jack input), and perform the adjustments.
The input terminal is specified in the ( ) in the signal column. Either input terminal can be used when there are no specifications.
The order of priority of the input signals is shown below.

1. DV jack input signal
2. S VIDEO jack input signal
3. VIDEO jack input signal

The color bar signal generated by DCR-VX1000 (NTSC) or DCR-VX1000E (PAL) is used for the DV jack input signal.

[How to generate the color bar signal]

1) Connect the adjustment remote commander to DCR-VX1000 (NTSC) or DCR-VX1000E (PAL).
2) Set the power switch to CAMERA.
3) Select page: 5, address: 02, and set data: 09.
   By carrying out the above procedure, DCR-VX1000 (NTSC) or DCR-VX1000E (PAL) generates the color bar signal. After completing adjustments, set data: 00 to the address.

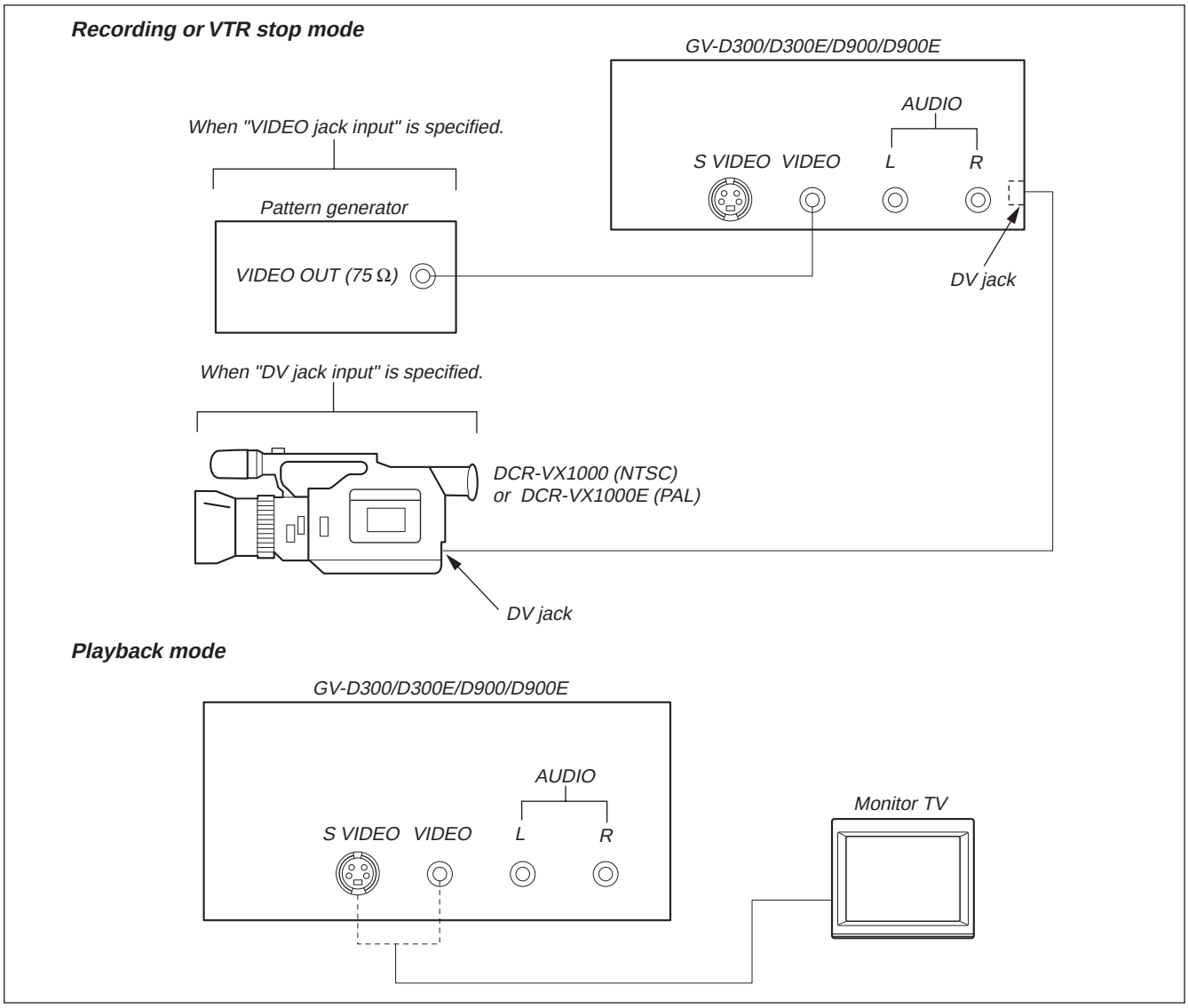

Fig. 5-3-1

3-1-5. Checking the Input Signals

Because the video signal obtained from the pattern generator is used as the adjustment signal for adjusting the video system, the video output signal must satisfy the given specifications.

Connect the oscilloscope to the VIDEO jack, and check that the sync signal amplitude of the video signal is approximately <0.286V> [0.30V], the amplitude of the video section is approximately <0.714> [0.70V], the amplitude of the burst signal is approximately <0.286> [0.30V] and flat, and that the level ratio of the burst signal to the "red" signal is 0.30 : 0.60.

The video signal used for adjusting the video section is shown in Fig. 5-3-2.

< > : NTSC model

[ ] : PAL model

Note: Measured in the Recording mode.

3-1-6. Alignment Tape

Use the alignment tape shown in the following table.

Use tapes specified in the signal column of each adjustment.

Name	Use
Tracking standard (XH2-1)	Tape path adjustment
SW/OL standard (XH2-3)	Switching position adjustment
Audio operation check (XH5-3 (NTSC), XH5-3P (PAL))	Audio system adjustment
System operation check (XH5-5 (NTSC), XH5-5P (PAL))	Operation check
BIST check (XH5-6 (NTSC), XH5-6P (PAL))	BIST check

Table. 5-3-1.

Fig. 5-3-2. Shows the 75% color bar signal recorded on the alignment tape for Audio Operation Check.

Note: Measure with VIDEO jack. (Terminated at 75 Ω)

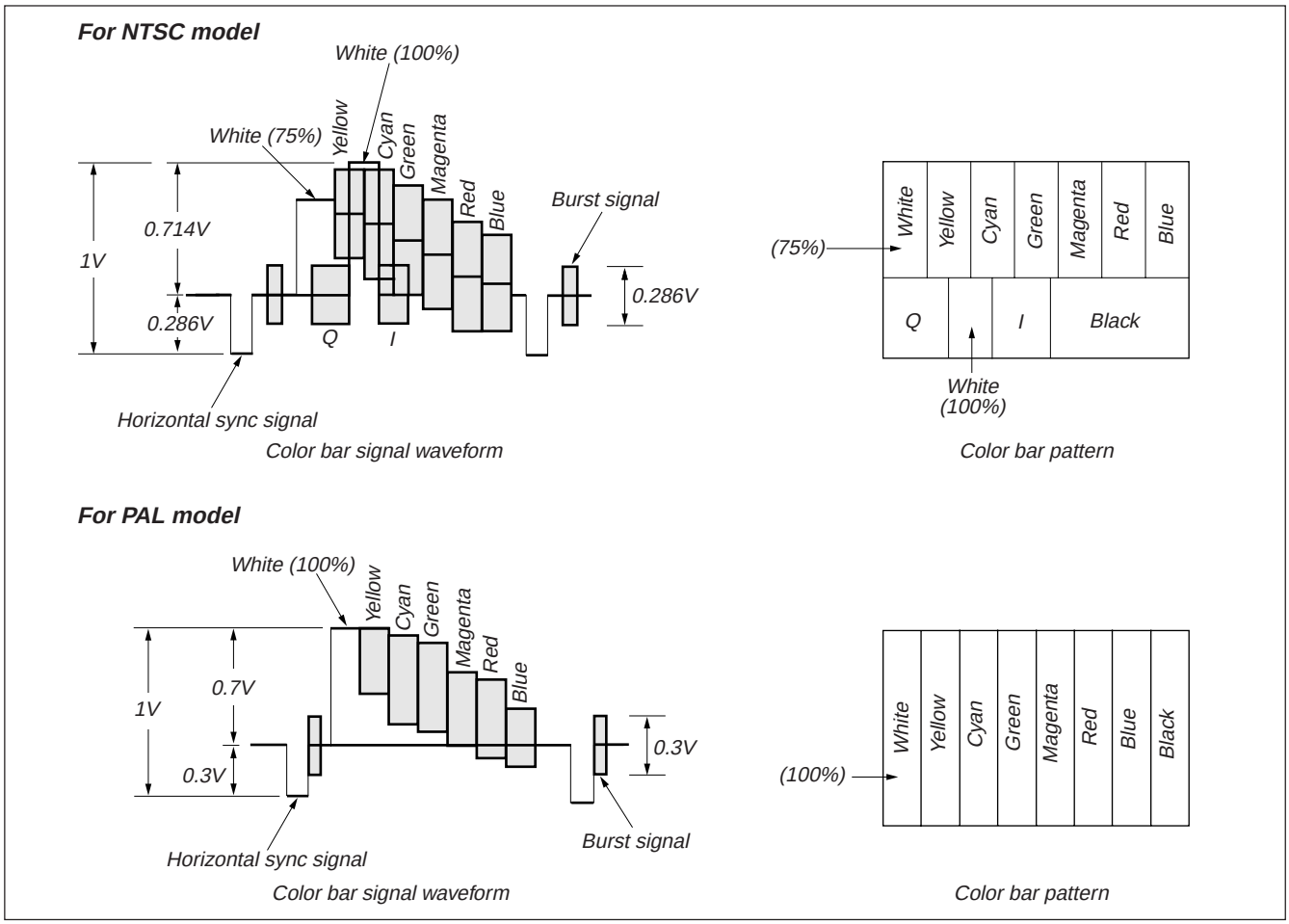

Fig. 5-3-2 Color bar signal of alignment tapes

3-1-7. Input/Output Level and Impedance

Video input / output

Phono jack, 1Vp-p, 75 Ω unbalanced, sync negative

S Video input / output

4-pin mini DIN

luminance signal: 1Vp-p, 75 Ω unbalanced, sync negative

Chrominance signal: 0.286Vp-p, 75 Ω unbalanced (NTSC)

0.300Vp-p, 75 Ω unbalanced (PAL)

Audio input / output

Phono jack

Input level: 327mV

Input impedance: More than 47kΩ

Output level: 327mV (at load impedance 47kΩ)

Output impedance: Below 2.2kΩ

3-2. INITIALIZATION OF D, C PAGE DATA

1. Initializing the D Page Data

Note: If the page D data is initialized, the following adjustments must be performed again.
1) Modification of D page data
2) Clock adjustments of the video system adjustments
3) Base band block adjustments of the video system adjustments
4) LCD system adjustments
5) IR transmitter adjustments
6) Battery end adjustment

Adjusting page	D
Adjusting Address	00 to FF

Initializing Method:

1) Select page: 0, address: 01, and set data: 01.
2) Select page: 2, address: 00, and set data: 2D, and press the PAUSE button of the adjustment remote commander.
3) Select page: 2, address: 01, set data: 2D, and press the PAUSE button.
4) Select page: 2, address: 02, and check that the data is "01".
5) Select page: 0, address: 01, and set data: 00.
6) Perform "Modification of D Page Data".

2. Modification of D Page Data

If the D Page data has been initialized, change the data of the "Fixed data-2" address shown in the following tables by manual input.

Modifying Method:

1) Before changing the data, select page: 0, address: 01, and set data: 01.
2) New data for changing are not shown in the tables because they are different in destination. When changing the data, copy the data built in the same model.
   Note: If copy the data built in the different model, the camcorder may not operate.
3) When changing the data, press the PAUSE button of the adjustment remote commander each time when setting new data to write the data in the non-volatile memory.
4) Check that the data of adjustment addresses is the initial value. If not, change the data to the initial value.
5) After changing the data, select page: 0, address: 01, and set data: 00.

3. D Page Table

Note: Fixed data-1 : Initialized data. (Refer to "1. Initializing the D Page Data".)
Fixed data-2 : Modified data. (Refer to "2. Modification of D PAGE Data").

Address	Initial value		Remark
	NTSC	PAL	
00 to 0F			
10	00	00	Test mode
11	00	00	
12			Fixed data-1
13			Fixed data-2
14			(Modified data, copy the data built in
15			the same model.)
16			Fixed data-1
17			(Initialized data)
18			
19			Fixed data-2
1A			
1B			Fixed data-1
1C			
1D			Fixed data-2
1E			Fixed data-1
1F			Fixed data-2
20			Fixed data-1
21			(Initialized data)
22			
23			
24			
25			
26			
27			
28	70	70	Battery end adj.
29	77	77	
2A	A0	A0	
2B	AD	AD	
2C	C0	C0	
2D			Fixed data-1
2E			
2F			
30			Fixed data-2
31			Fixed data-1
32			Fixed data-2
33			
34			
35			
36			Fixed data-1
37	70	70	Battery end adj.
38			Fixed data-2
39			Fixed data-1
3A			
3B			
3C			Fixed data-2
3D			Fixed data-1
3E			Fixed data-2
3F			

Address	Initial value		Remark
	NTSC	PAL	
40			Fixed data-1
41			
42			
43			
44			
45			
46			
47			
48			
49			Fixed data-2
4A			
4B			
4C			Fixed data-1
4D			
4E			
4F			
50			Fixed data-2
51			Fixed data-1
52			
53			
54			
55			
56			
57			
58			
59	48	48	NPS Y level adj.
5A			Fixed data-1
5B			
5C			
5D			
5E			
5F			
60	75	75	Hue adj. (LCD)
61	70	70	White balance adj. (LCD)
62	6F	6F	
63	7C	7C	Contrast adj. (LCD)
64	CA	CA	Panel –19V adj.
65	8A	8A	VCO adj. (LCD)
66			Fixed data-2
67			
68	59	59	H position adj. (LCD)
69			Fixed data-1
6A			Fixed data-2
6B			
6C	7C	7C	Bright adj. (LCD)
6D	86	86	Color adj. (LCD)
6E			Fixed data-2
6F			
70			Fixed data-1
71			
72			
73			
74			
75			
76			
77			

Address	Initial value		Remark
	NTSC	PAL	
78			Fixed data-1
79			
7A			
7B			
7C			
7D			
7E			
7F			Fixed data-2
80			Fixed data-1
81			
82			
83			
84			
85			
86			
87			
88			
89			
8A			
8B			
8C			
8D			
8E			
8F			
90	40	40	IR video carrier adj.
91	20	20	IR video deviation adj.
92	20	20	IR audio deviation adj.
93			Fixed data-1
94	40	40	S VIDEO out chroma level adj.
95	40	40	S VIDEO out Y level adj.
96	40	40	VIDEO out Y level adj.
97	40	40	NPS R-Y level adj.
98	4C	4C	27 MHz XTAL f0 adj.
99	28	28	NPS B-Y level adj.
9A	34	34	AGC adj.
9B	2F	2F	Y AD level adj.
9C	22	22	CR AD level adj.
9D	0F	0F	CB AD level adj.
9E	58	58	Decorder ACC adj.
9F	97	97	Decorder APC adj.
A0	62	62	Decorder HUE adj.
A1	A6	A6	AFC f0 adj.
A2	6E	6E	AFC TC adj.
A3			Fixed data-1
A4			Fixed data-2
A5			
A6	CD	CD	VIDEO out burst level adj.
A7			Fixed data-2
A8			Fixed data-1
A9			
AA			Fixed data-2
AB			Fixed data-1
AC			
AD			Fixed data-2
AE			Fixed data-1
AF			Fixed data-2

Address	Initial value		Remark
	NTSC	PAL	
B0			Fixed data-1
B1			
B2			
B3			
B4	FF	FF	CR AD clamp adj.
B5	FF	FF	CB AD clamp adj.
B6	FF	FF	Y AD clamp adj.
B7			Fixed data-1
B8			
B9			
BA			
BB			
BC			
BD			
BE			
BF			
C0			
C1			
C2			
C3			
C4			
C5			
C6			
C7			
C8			
C9			
CA			
CB			
CC			
CD			
CE			
CF			
D0			
D1			
D2			
D3			
D4			
D5			
D6			
D7			
D8			
D9			
DA			
DB			
DC			
DD			
DE			
DF			
E0 to FF			

Table. 5-3-2.

4. Initializing the C Page Data

Note: If the page C data is initialized, the following adjustments must be performed again.
1) Modification of C page data
2) Servo system adjustments
3) All RF block adjustments of the video system adjustments

Adjusting page	C
Adjusting Address	00 to 6F

Initializing Method:

1) Select page: 0, address: 01, and set data: 01.
2) Select page: 4, address: 02, set data: 01, and press the PAUSE button of the adjustment remote commander.
3) Check that the data of page: 4, address: 02 changes in order of “01”, “03”, “05”, “00”.
5) Select page: 0, address: 01, and set data: 00.
6) Perform “Modification of C Page Data”.

5. Modification of C Page Data

If the C Page data has been initialized, change the data of the “Fixed data-2” address shown in the following table by manual input.

Modifying Method:

1) Before changing the data, select page: 0, address: 01, and set data: 01.
2) New data for changing are not shown in the tables because they are different in destination. When changing the data, copy the data built in the same model.
   Note: If copy the data built in the different model, the camcorder may not operate.
3) When changing the data, press the PAUSE button of the adjustment remote commander each time when setting new data to write the data in the non-volatile memory.
4) Check that the data of adjustment addresses is the initial value. If not, change the data to the initial value.
5) After changing the data, select page: 0, address: 01, and set data: 00.

6. C Page Table

Note: Fixed data-1 : Initialized data. (Refer to “4. Initializing the C Page Data”.)
Fixed data-2 : Modified data. (Refer to “5. Modification of C PAGE Data”.)

Address	Initial value		Remark
	NTSC	PAL	
00			Fixed data-1
01			
02			
03			
04			
05			
06			
07			
08			Fixed data-2
09			Fixed data-1
0A			Fixed data-2
0B			Fixed data-1
0C			
0D			
0E			
0F			
10			
11			

Address	Initial value		Remark
	NTSC	PAL	
12			Fixed data-1
13			Fixed data-2
14			Fixed data-1
15			
16			
17			
18			
19			Fixed data-2
1A			Fixed data-1
1B			Fixed data-2
1C			Fixed data-1
1D			
1E			
1F			
20			
21			
22			
23			
24			
25			
26			
27			
28			
29			
2A			
2B			
2C			
2D			
2E			
2F			Fixed data-2
30	00	00	Emergency memory address
31	00	00	
32	00	00	
33	00	00	
34	00	00	
35	00	00	
36	00	00	
37	00	00	
38	00	00	
39	00	00	
3A	00	00	
3B	00	00	
3C	F0	F0	PLL f0 adj.
3D	F0	F0	
3E	70	70	REC current adj.
3F	70	70	
40	C0	C0	AEQ adj.
41	C0	C0	
42	90	90	
43	90	90	
44	90	90	AGC center level adj.
45			Fixed data-1
46	80	80	PLL capture range adj.
47	C0	C0	CLK DELAY adj.
48			Fixed data-1
49			

Address	Initial value		Remark
	NTSC	PAL	
4A			Fixed data-1
4B			
4C	00	00	Switching position adj.
4D	00	00	
4E	00	00	
4F	00	00	
50			Fixed data-1
51			Fixed data-2
52			Fixed data-1
53			
54			
55			
56			
57			
58			
59	00	00	T reel FG duty adj.
5A			Fixed data-2
5B			Fixed data-1
5C			
5D			
5E			
5F			
60			Fixed data-2
61			Fixed data-1
62			Fixed data-2
63			Fixed data-1
64			
65			
66			
67			
68			
69			
6A			
6B			
6C			
6D			
6E			
6F	00	00	T reel FG duty adj.

Table. 5-3-3.

3-3. SYSTEM CONTROL SYSTEM ADJUSTMENT

1. Battery End Adjustment (CB-61 board)

Set the battery end voltage.
If the voltage is incorrect, the life of the battery will shorten.
The image at the battery end will also be rough.

Mode	Recording
Signal	Color bar
Measurement Point	LCD display of the adjustment remote commander
Measuring Instrument	
Adjustment Page	D
Adjustment Address	28 to 2C, 37

Switch setting:

1) LCD screen ..... Open

Connection:

1) Connect the regulated power supply and the digital voltmeter to the battery terminal as shown in Fig. 5-3-3.

Adjusting method:

1) Adjust the output voltage of the regulated power supply so that the digital voltmeter display is 6.1 ± 0.1Vdc.
2) Turn off the power supply.
3) Turn on the HOLD switch of the adjustment remote commander.
4) Turn on the power supply.
5) Load a cassette, and set to the camera recording mode.
6) Select page: 0, address: 01, and set data: 01.
7) Decrease the output voltage of the regulated power supply so that the digital voltmeter display is 5.30 ± 0.01Vdc.
8) Select page: 2, address: 51, read the data, and this data is named Dref.
9) Select page: D, address: 28, set data: Dref, and then press the PAUSE button of the adjustment remote commander.
10) Select page: D, address: 37, set data: Dref, and then press the PAUSE button of the adjustment remote commander.
11) Convert Dref to decimal notation, and obtain Dref'. (Refer to Table 5-4-2. "Hexadecimal-decimal conversion table" of "5-4. Service mode")
12) Calculate D_{29}', D_{2A}', D_{2B}' and D_{2C}' using following equations (decimal calculation), convert it to a hexadecimal number, and input each adjustment address.
    Address: 29 $D_{29}' = Dref' + 11$
    Address: 2A $D_{2A}' = Dref' + 36$
    Address: 2B $D_{2B}' = Dref' + 58$
    Address: 2C $D_{2B}' = Dref' + 66$
    Note: After setting each data, be sure to press the PAUSE button.
13) Select page: 0, address: 01, and set data: 00.

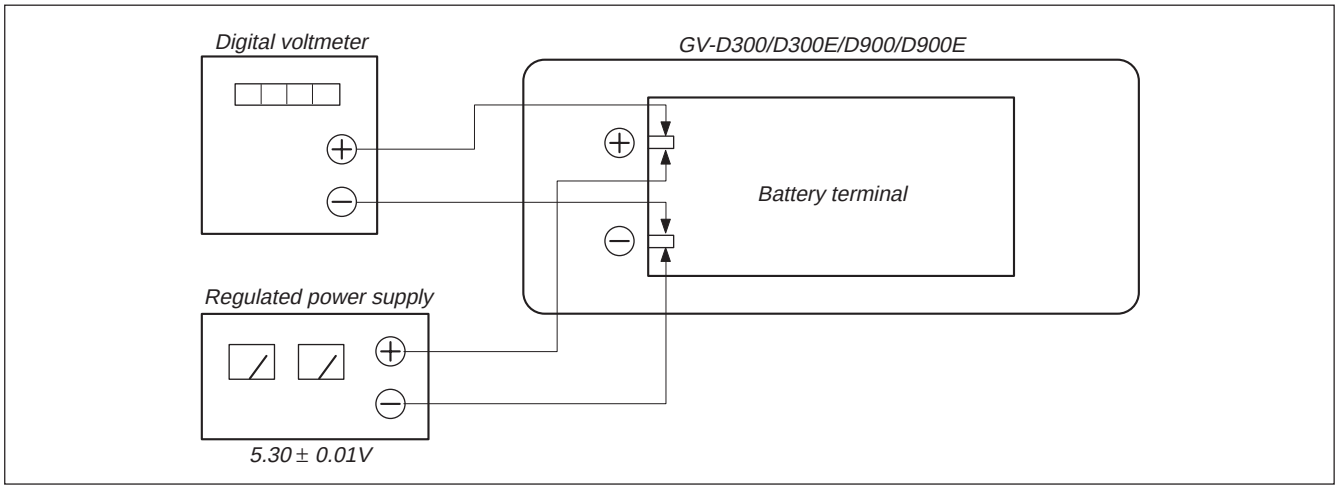

Fig. 5-3-3

3-4. SERVO SYSTEM ADJUSTMENTS

1. T Reel FG Duty Adjustment (RJ-77 Board)

Measurement Point	Display data of page: C, address: 6F
Measuring Instrument	Adjustment remote commander
Adjustment Page	C
Adjustment Address	59, 6F
Specified Value	“01”, or “02” , “03”

Adjusting Method:

1) Set the POWER switch to ON.
2) Close the cassette compartment without inserting a cassette.
3) Set the HOLD switch of the adjustment remote commander to ON (SERVICE position).
4) Select page: 0, address: 01, and set data: 01.
5) Select page: C, address: 6A, set data: 10, and press the PAUSE button of the adjustment remote commander.
6) Select page: 3, address: 09, set data: 00, and press the PAUSE button.
7) Select page: 3, address: 01, set data: 1A, and press the PAUSE button. (to start up automatic “T reel FG Duty Adjustments”.)
8) Select page: 3, address: 02, and check that the data is changed from “17” to “00”.
9) Set the HOLD switch of the adjustment remote commander to OFF, and wait more than 2 seconds. (so that the adjustment data is automatically written in page: C, address: 59 and 6F).
10) Set the HOLD switch to ON.
11) Check that the data of page: 3, address: 04 and that of page: C, address: 6F are the same.
12) Select page: C, address: 6F. If the data is “01”, or “02”, “03”, it means that the automatic T reel FG duty adjustment has ended normally.
13) Select page: C, address: 6A, set data: 00, and press the PAUSE button of the adjustment remote commander.
14) Select page: 0, address: 01, and set data: 00.
15) Turn OFF the power supply.

2. Switching Position Adjustment (RJ-77 Board)

Mode	VTR Playback
Signal	SW/OL reference tape (XH2-3)
Measurement Point	Display data of page: 3, address: 03
Measuring Instrument	Adjustment remote commander
Adjustment Page	C
Adjustment Address	4C, 4D, 4E, 4F
Specified Value	“00”.

Adjusting Method:

1) Select page: 0, address: 01, and set data: 01.
2) Select page: 3, address: 01, set data: 0E, and press the PAUSE button of the adjustment remote commander.
3) Select page: 3, address: 02, and check that the data is changed from “0E” to “00”.
4) Select page: 3, address: 03, and check that the data is “00”.
5) Set the HOLD switch of the adjustment remote commander to OFF, and wait more than 2 seconds (so that the adjustment data is automatically written in page: C, address: 4C to 4F).
6) Set the HOLD switch of the adjustment remote commander to ON.
7) Select page: 0, address: 01, and set data: 00.
8) Set to the stop mode.
9) Turn OFF the power supply.

3-5. VIDEO SYSTEM ADJUSTMENTS

3-5-1. RF Block Adjustments

1. Recording Current Adjustment (RJ-77 Board)

Mode	VTR stop
Measurement Point	ODDch adjustment CH1: Pin ⑤ of CN2708 (CL2718) CH2: Pin ⑥ of CN2708 (CL2719) EVENch adjustment CH1: Pin ⑨ of CN2708 (CL2722) CH2: Pin ⑧ of CN2708 (CL2721)
Measuring Instrument	Oscilloscope ADD mode CH2 INV mode
Adjustment Page	C
Adjustment Address	3E, 3F
Specified Value	A = 3.1 ± 0.1 Vp-p

Connection:

Disconnect CN2708 and connect as follows.

1) ODDch adjustment: Connect a 180 Ω resistor between Pin ⑤ of CN2708 (CL2718) and Pin ⑥ of CN2708 (CL2719).
2) EVENch adjustment: Connect a 180 Ω resistor between Pin ⑨ of CN2708 (CL2722) and Pin ⑧ of CN2708 (CL2721).
   180 Ω resistor (Parts code: 1-249-408-11)

Adjusting method:

1) Equalize the vertical range of CH1 and CH2 of the oscilloscope.
2) Set the oscilloscope to the ADD mode, and set CH2 to the INV mode.
3) Select page: 0, address: 01, and set data: 01.
4) Select page: 3, address: 01, set data: 0C, and press the PAUSE button of the Adjustment remote commander.
5) Select page: 3, address: 34, and set data: 01.
6) Select page: C, address: 3F (ODDch adjustment) or address: 3E (EVENch adjustment), change the data and adjust the signal voltage (A) to the specified value.
7) Press the PAUSE button of the adjustment remote commander.
8) Select page: 3, address: 34, and set data: 04.
9) Select page: 3, address: 01, set data: 00, and press the PAUSE button of the Adjustment remote commander.
10) Select page: 0, address: 01, and set data: 00.

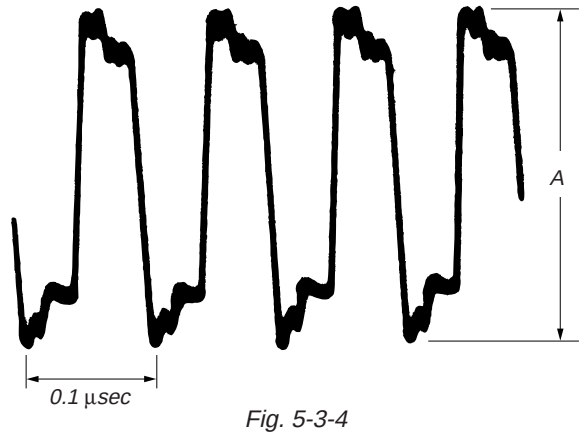

Fig. 5-3-4

2. PLL f_0 Adjustment (RJ-77 Board)

Mode	VTR stop
Measurement Point	Display data of page: 3, address: 04
Measuring Instrument	Adjustment remote commander
Adjustment Page	C
Adjustment Address	3C, 3D
Specified Value	Displayed data is “FD” to “FF” or “00” to “03”. (“FF”, “00” are center values)

Adjusting method:

1) Select page: 0, address: 01, and set data: 01.
2) Select page: 3, address: 01, set data: 05, and press the PAUSE button of the Adjustment remote commander.
3) Select page: 3, address: 36, and set data: 04.
4) Select page: 3, address: 04, and check that the average value D_{04} of the displayed data is “FD” to “FF” or “00” to “03”. If outside this range, change the data of page: C, address: 3C, and check again.
   [If D_{04} is “80” to “FC”]
   Decrease the data of page: C, address: 3C. (As the data is to be rewritten, press the PAUSE button of the adjustment remote commander.)
   [If D_{04} is “04” to “7F”]
   Increase the data of page: C, address: 3C. (As the data is to be rewritten, press the PAUSE button of the adjustment remote commander.)
5) Select page: 3, address: 36, and set data: 05.
6) Select page: 3, address: 04, and check that the average value D04 of the displayed data is “FD” to “FF” or “00” to “03”. If outside this range, change the data of page: C, address: 3D, and check again.
   [If D_{04} is “80” to “FC”]
   Decrease the data of page: C, address: 3D. (As the data is to be rewritten, press the PAUSE button of the adjustment remote commander.)
   [If D_{04} is “04” to “7F”]
   Increase the data of page: C, address: 3D. (As the data is to be rewritten, press the PAUSE button of the adjustment remote commander.)
7) Select page: 3, address: 01, set data: 00, and press the PAUSE button of the adjustment remote commander.
8) Select page: 3, address: 36, and set data: 02.
9) Select page: 0, address: 01, and set data: 00.

3. CLK DELAY Adjustment (RJ-77 Board)

Mode	Recording /playback (LP mode)
Signal	Color bar
Measurement Point	CH1: Pin ㉛ of CN9930 (C1ERP) on CB-61 board CH2: Pin ⑯ of CN9928 (JSWP) on CB-61 board
Measuring Instrument	Oscilloscope Trigger source: CH2
Adjustment Page	C
Adjustment Address	47

Adjusting method:

1) Record for two minutes on any tape.
2) Select page: 0, address: 01, and set data: 01.
3) Write the following data in page: C, addresses: 40 to 44, 47, 4B, 5A.
   (To write the data, press the PAUSE button of the adjustment remote commander each time data is set.)
   Page: C, address: 40, data: C0
   Page: C, address: 41, data: C0
   Page: C, address: 42, data: 90
   Page: C, address: 43, data: 90
   Page: C, address: 44, data: 90
   Page: C, address: 47, data: C0
   Page: C, address: 4B, data: 80
   Page: C, address: 5A, data: 00
4) Playback the recorded portion.
5) Increase the data of page: C, address: 47 from "C0", and read the data D_1 when the CH1 pulse is set to the whole audio and video areas.
6) Decrease the data of page: C, address: 47 from "C0", and read the data D_2 when the CH1 pulse is set to the whole audio and video areas.
7) Obtain the average value of D_1 and D_2 , and take it as D_3.
8) Select page: C, address: 47, set data: D_3, and press the PAUSE button of the adjustment remote commander.
9) Select page: C, address: 4B, set data: 00, and press the PAUSE button.
10) Select page: C, address: 5A, set data: 8C, and press the PAUSE button.
11) Select page: 0, address: 01, and set data: 00.
12) After completing the adjusting, perform "5. AEQ Adjustment".

When the CH1 pulse is not set.

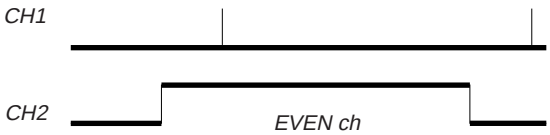

When the CH1 pulse is set.

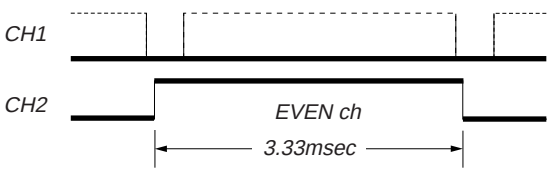

Fig. 5-3-5

4. AGC Center Level Adjustment (RJ-77 Board)

Mode	Recording /playback (LP mode)
Signal	Color bar
Measurement Point	CH1: Pin ㉛ of CN9930 (C1ERP) on CB-61 board CH2: Pin ⑯ of CN9928 (JSWP) on CB-61 board
Measuring Instrument	Oscilloscope Trigger source: CH2
Adjustment Page	C
Adjustment Address	44

Adjusting method:

1) Record for two minutes on any tape.
2) Select page: 0, address: 01, and set data: 01.
3) Write the following data in page: C, addresses: 40 to 44, 4B, 5A.
   (To write the data, press the PAUSE button of the adjustment remote commander each time data is set.)
   Page: C, address: 40, data: C0
   Page: C, address: 41, data: C0
   Page: C, address: 42, data: 90
   Page: C, address: 43, data: 90
   Page: C, address: 44, data: 90
   Page: C, address: 4B, data: 80
   Page: C, address: 5A, data: 00
4) Playback the recorded portion.
5) Increase the data of page: C, address: 44 from "90", and read the data D_1 when the CH1 pulse is set to the whole audio and video areas.
6) Decrease the data of page: C, address: 44 from "90", and read the data D_2 when the CH1 pulse is set to the whole audio and video areas.
7) Obtain the average value of D_1 and D_2 , and take it as D_3.
8) Select page: C, address: 44, set data: D_3, and press the PAUSE button of the adjustment remote commander.
9) Select page: C, address: 4B, set data: 00, and press the PAUSE button.
10) Select page: C, address: 5A, set data: 8C, and press the PAUSE button.
11) Select page: 0, address: 01, and set data: 00.
12) After completing the adjusting, perform "5. AEQ Adjustment".

When the CH1 pulse is not set.

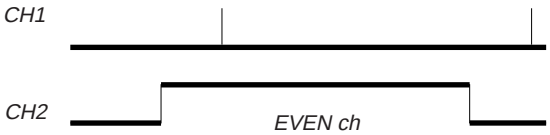

When the CH1 pulse is set.

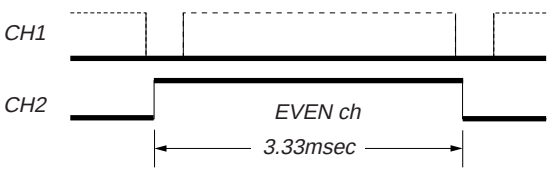

Fig. 5-3-6

5. AEQ Adjustment (RJ-77 Board)

Mode	Recording /playback (LP mode)
Signal	Color bar
Measurement Point	CH1: Pin ⑭ of CN9928 (RF MONITOR) on CB-61 board CH2: Pin ⑯ of CN9928 (JSWP) on CB-61 board
Measuring Instrument	Oscilloscope Trigger source: CH2
Adjustment Page	C
Adjustment Address	40, 41, 42, 43, 5A

Note: Connect a 75 Ω resister between Pin ⑭ (RF MONITOR) and Pin ⑬ (GND) of CN9928.
75 Ω resister (Parts code: 1-247-804-11)

Adjusting method:

1) Select page: 0, address: 01, and set data: 01.
2) Write the following data in page: C, addresses: 40 to 43, 4B, 5A.
   (To write the data, press the PAUSE button of the adjustment remote commander each time data is set.)
   Page: C, address: 40, data: C0
   Page: C, address: 41, data: C0
   Page: C, address: 42, data: 90
   Page: C, address: 43, data: 90
   Page: C, address: 4B, data: 80
   Page: C, address: 5A, data: 00
3) Record for two minutes from tape top.
4) Rewind the tape, and play back from the tape top.
5) When the RF output stabilizes, select page: 3, address: 01, set data: 07, and press the PAUSE button of the adjustment remote commander.
6) About 20 to 30 seconds after pressing the PAUSE button, check that the data of page: 3, address: 02 changes from “07” to “00”.
7) Check that the data of page: 3, address: 03 is following value.
   When “00” : Normal
   When “01” : EVENch is faulty
   When “02” : ODDch is faulty
   When “03” : EVENch and ODDch are faulty
   Perform the following procedure only when “00” is displayed.
8) Read the data of page: 3, address: 04 to 07, and take the values as D_{04}, D_{05}, D_{06} and D_{07}.
9) Select page: C, address: 40, set data: D_{04}, and press the PAUSE button of the adjustment remote commander.
10) Select page: C, address: 42, set data: D_{05}, and press the PAUSE button.
11) Select page: C, address: 41, set data: D_{06}, and press the PAUSE button.
12) Select page: C, address: 43, set data: D_{07}, and press the PAUSE button.
13) Select page: C, address: 4B, set data: 00, and press the PAUSE button.
14) Select page: C, address: 5A, set data: 8C, and press the PAUSE button.
15) Select page: 0, address: 01, and set data: 00.

6. PLL Capture Range Adjustment (RJ-77 Board)

Mode	Recording /playback (LP mode)
Signal	Color bar
Measurement Point	CH1: Pin ㉛ of CN9930 (C1ERP) on CB-61 board CH2: Pin ⑯ of CN9928 (JSWP) on CB-61 board
Measuring Instrument	Oscilloscope Trigger source: CH2
Adjustment Page	C
Adjustment Address	46

Adjusting method:

1) Record for two minutes on any tape.
2) Select page: 0, address: 01, and set data: 01.
3) Write the following data in page: C, address: 4B and 5A.
   (To write the data, press the PAUSE button of the adjustment remote commander each time data is set.)
   Page: C, address: 4B, data: 80
   Page: C, address: 5A, data: 00
4) Playback the recorded portion.
5) Select page: C, address: 46, set data: 80, and press the PAUSE button of the adjustment remote commander.
6) Set the data of page: C, address: 46 to “60”, and check that the pulse is not set at the audio area head of the C1ERP waveform's ODDch of the oscilloscope (CH1).
7) Set the data of page: C, address: 46 to “A0”, and check that the pulse is not set at the audio area head of the C1ERP waveform's ODDch of the oscilloscope (CH1). After confirming steps 6) and 7), set the data of page: C, address: 46 to “80”, and proceed to step 12).
8) If the pulse is set in steps 6) and 7), increase the data of page: C, address: 46 from “80“, and read the data D_1 when the pulse is set at the audio area head of CH1.
9) Decrease the data of page: C, address: 46 from “80“, and read the data D_2 when the pulse is set at the audio area head of CH1.
10) Obtain the average value of D_1 and D_2 , and take it as D_3.
11) Select page: C, address: 46, set data: D_3, and press the PAUSE button of the adjustment remote commander.
12) Select page: C, address: 4B, set data: 00, and press the PAUSE button.
13) Select page: C, address: 5A, set data: 8C, and press the PAUSE button.
14) Select page: 0, address: 01, and set data: 00.

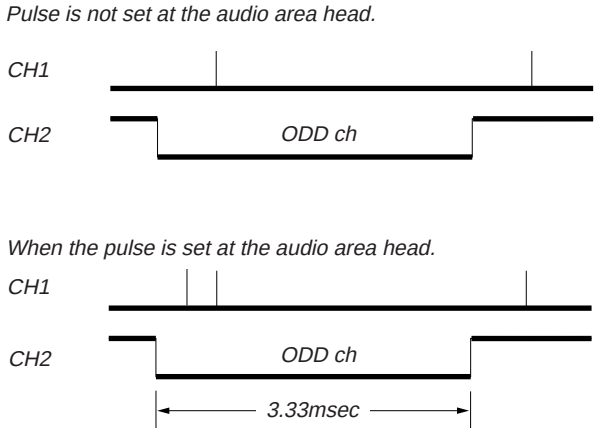

Fig. 5-3-7

3-5-2. Clock Adjustments

1. IC1900 27MHz XTAL f_0 Adjustment (RJ-77 Board)

Set the sub-carrier frequency of the video output signal in the VTR mode.

Mode	VTR stop
Signal	No signal
Measurement Point	Pin ㉟ of CN9921 on CB-61 board (CK135) or R1114 (Pin ⑩① of IC1101)
Measuring Instrument	Frequency counter
Adjustment Page	D
Adjustment Address	98
Specified Value	f = 13500000 ± 68 Hz (NTSC) f = 13500000 ± 68 Hz (PAL)

Adjusting method:

1) Select page: 0, address: 01, and set data: 01.
2) Select page: D, address: 15, after memorizing the data, set the bit value of bit2 to "0". (Refer to "4-3, 3. Bit value discrimination" of "5-4. Service Mode").
3) Select page: D, address: 98, change the data and set the clock frequency (f) to the specified value.
4) Press the PAUSE button of the adjustment remote commander.
5) Select page: D, address: 15, and set the data memorized at step 2). Press the PAUSE button of the adjustment remote commander.
6) Select page: 0, address: 01, and set data: 00.

2. IC1900 VCO Operation Check (RJ-77 Board)

Mode	VTR stop
Signal	No signal
Measurement Point	Display data of page: 2, address: 0E
Measuring Instrument	Adjustment remote commander
Specified Value	"C0" to "FF"

Adjusting method:

1) Select page: 0, address: 01, and set data: 01.
2) Select page: D, address: 15, after memorizing the data, set the bit value of bit2 to "0". (Refer to "4-3, 3. Bit value discrimination" of "5-4. Service Mode").
3) Select page: 2, address: 05, set data: 02, and press the PAUSE button of the adjustment remote commander.
4) Select page: D, address: B0, set data: 03, and press the PAUSE button.
5) Select page: 2, address: 0E, and check that the data is "C0" to "FF".
6) Select page: D, address: B0, set data: 05, and press the PAUSE button.
7) Select page: 2, address: 0E, and check that the data is "C0" to "FF".
8) Select page: D, address: B0, set data: 00, and press the PAUSE button.
9) Select page: 2, address: 05, set data: 00, and press the PAUSE button.
10) Select page: D, address: 15, and set the data memorized at step 2).
11) Select page: 0, address: 01, and set data: 00.

3. IC6101 41.85MHz VCO Operation Check (RJ-77 Board)

Mode	VTR stop
Signal	No signal
Measurement Point	Display data of page: 3, address: 39
Measuring Instrument	Adjustment remote commander
Specified Value	"37" to "C9"

Checking method:

1) Select page: 3, address: 39, and check that the data is "37" to "C9".

3-5-3. Base Band Block Adjustments

Note: In some adjustments, the color bar signal generated by DCR-VX1000(NTSC) or DCR-VX1000E(PAL) is used for the video input signal.

[How to generate the color bar signal]

1) Connect the adjustment remote commander to DCR-VX1000(NTSC) or DCR-VX1000E(PAL).
2) Set the power switch to CAMERA.
3) Select page: 5, address: 02, and set data: 09.
   By carrying out the above procedure, DCR-VX1000(NTSC) or DCR-VX1000E(PAL) generates the color bar signal. After completing adjustments, set data: 00 to the address.

1. NPS PLL Adjustment (CB-61 Board)

Set the NPS PLL free-run frequency.

Mode	VTR stop
Signal	Color bar signal generated by DCR-VX1000(NTSC) or DCR-VX1000E(PAL) (DV jack input)
Measurement Point	Pin ⑰ of CN9932 (NPS PLL)
Measuring Instrument	Frequency counter
Adjustment Element	CT1200
Specified Value	f = 14318180 ± 100Hz (NTSC) f = 17734480 ± 100Hz (PAL)

Adjusting method:

1) Set the frequency (f) to the specified value using CT1200.

2. NPS Y Level Adjustment (CB-61 Board)

Set the IC1103 PB Y input signal level.

Mode	VTR stop
Signal	Color bar signal generated by DCR-VX1000(NTSC) or DCR-VX1000E(PAL) (DV jack input)
Measurement Point	Pin ⑱ of CN9932 (NPS Y)
Measuring Instrument	Oscilloscope
Adjustment Page	D
Adjustment Address	59
Specified Value	A = 125 ± 3mV (NTSC) A = 140 ± 3mV (PAL)

Connection: Connect Pin ⑱ of CN9932 and Pin ⑲ (GND) of CN9932 with a 470 Ω resistor (Parts code: 1-249-413-11)

Adjusting method:

1) Select page: 0, address: 01, and set data: 01.
2) Select page: D, address: 59, change the data and set the sync signal level (A) to the specified value.
3) Press the PAUSE button of the adjustment remote commander.
4) Select page: 0, address: 01, and set data: 00.
5) Perform “Video Output Y Level Adjustment”.

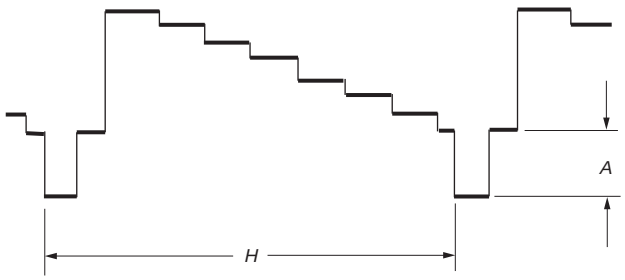

Fig. 5-3-8

3. VIDEO Output Y Level Adjustment (CB-61 Board)

Set the Y signal level of the Video output signal.

Mode	VTR stop
Signal	No signal
Measurement Point	VIDEO jack (75 Ω terminated)
Measuring Instrument	Oscilloscope
Adjustment Page	D
Adjustment Address	96
Specified Value	A = 286 ± 6mV (NTSC) A = 300 ± 6mV (PAL)

Adjusting method:

1) Select page: 0, address: 01, and set data: 01.
2) Select page: D, address: 15, after memorizing the data, set the bit value of bit2 to "0". (Refer to "4-3, 3. Bit value discrimination" of "5-4. Service Mode").
3) Select page: D, address: 96, change the data and set the sync signal level (A) to the specified value.
4) Press the PAUSE button of the adjustment remote commander.
5) Select page: D, address: 15, and set the data memorized at step 2).
6) Press the PAUSE button of the adjustment remote commander.
7) Select page: 0, address: 01, and set data: 00.
8) Perform "VIDEO Output Chroma Level Adjustment".

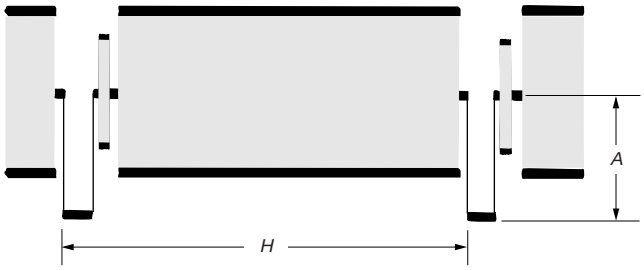

Fig. 5-3-9

4. S VIDEO Output Y Level Adjustment (CB-61 Board)

Set the Y signal level of the S video output signal.

Mode	VTR stop
Signal	No signal
Measurement Point	Y signal terminal of S VIDEO jack (75 Ω terminated)
Measuring Instrument	Oscilloscope
Adjustment Page	D
Adjustment Address	95
Specified Value	A = 286 ± 6mV (NTSC) A = 300 ± 6mV (PAL)

Note: Insert a plug in the S VIDEO jack.

Adjusting method:

1) Select page: 0, address: 01, and set data: 01.
2) Select page: D, address: 15, after memorizing the data, set the bit value of bit2 to "0". (Refer to "4-3, 3. Bit value discrimination" of "5-4. Service Mode").
3) Select page: D, address: 95, change the data and set the sync signal level (A) to the specified value.
4) Press the PAUSE button of the adjustment remote commander.
5) Select page: D, address: 15, and set the data memorized at step 2).
6) Press the PAUSE button of the adjustment remote commander.
7) Select page: 0, address: 01, and set data: 00.

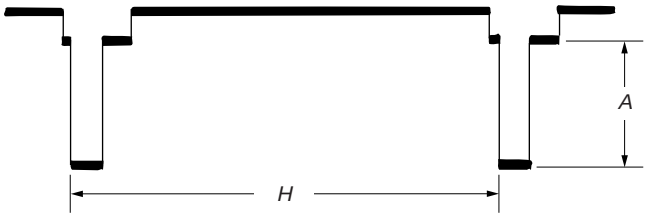

Fig. 5-3-10

5. AGC Adjustment (CB-61 Board)

Set the IC9004 AGC gain.

Mode	VTR stop
Signal	Color bar (VIDEO jack input)
Measurement Point	Y signal terminal of S VIDEO jack (75 Ω terminated)
Measuring Instrument	Oscilloscope
Adjustment Page	D
Adjustment Address	9A
Specified Value	A = 1.00 ± 0.02V

Note: Before perform this adjustment, check that the specified value of "S VIDEO Output Level Adjustment" is satisfied.

Adjusting method:

1) Select page: 0, address: 01, and set data: 01.
2) Select page: 2, address: 13, and set data: FE.
3) Select page: D, address: 9A, change the data and set the Y signal level (A) to the specified value.
4) Press the PAUSE button of the adjustment remote commander.
5) Select page: 2, address: 13, and set data: 00.
6) Select page: 0, address: 01, and set data: 00.

For NTSC model

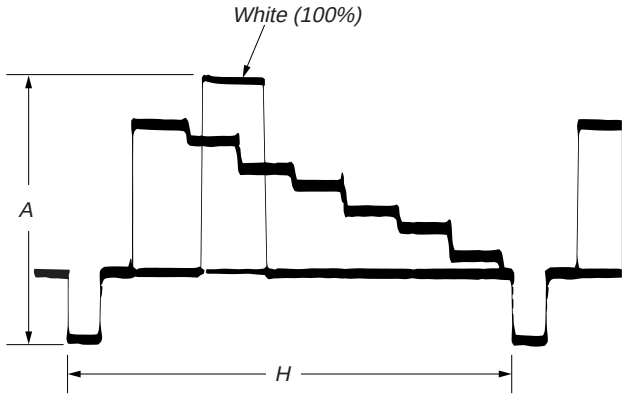

For PAL model

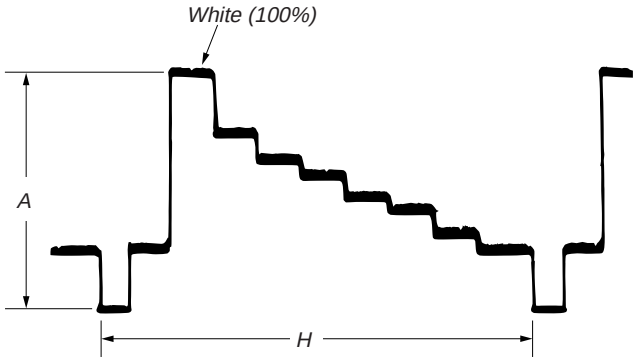

Fig. 5-3-11

6. NPS B-Y Level Adjustment (CB-61 Board)

Set the IC1101 CB OUT level.

Mode	VTR stop
Signal	Color bar signal generated by DCR-VX1000(NTSC) or DCR-VX1000E(PAL) (DV jack input) (Note)
Measurement Point	VIDEO jack (75 Ω terminated)
Measuring Instrument	Oscilloscope
Adjustment Page	D
Adjustment Address	99
Specified Value	A = 450 ± 10mV (NTSC) A = 460 ± 10mV (PAL)

Note: How to generate the color bar signal.

1) Connect the adjustment remote commander to DCR-VX1000(NTSC) or DCR-VX1000E(PAL).
2) Set the power switch to CAMERA.
3) Select page: 5, address: 02, and set data: 09.
   By carrying out the above procedure, DCR-VX1000(NTSC) or DCR-VX1000E(PAL) generates the color bar signal. After completing adjustments, set data: 00 to the address.

Adjusting method:

1) Check that RV1200 is the mechanical center.
2) Select page: 0, address: 01, and set data: 01.
3) Select page: D, address: 99, change the data and set the blue level (A) to the specified value.
4) Press the PAUSE button of the adjustment remote commander.
5) Select page: 0, address: 01, and set data: 00.
6) Perform "VIDEO Output Burst Level Adjustment".

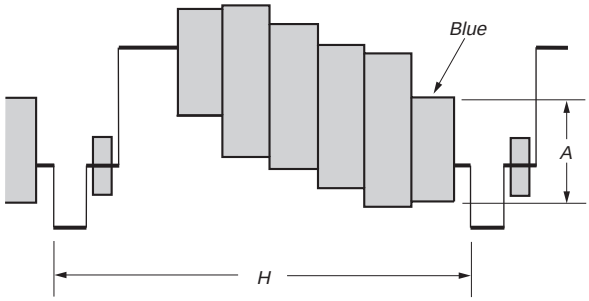

Fig. 5-3-12

7. NPS R-Y Level Adjustment for PAL model (CB-61 Board)

Adjust the IC1101 CR out level.

Mode	VTR stop
Signal	Color bar signal generated by DCR-VX1000E(PAL) (DV jack input)
Measurement Point	VIDEO jack (75 Ω terminated)
Measuring Instrument	Oscilloscope
Adjustment Page	D
Adjustment Address	97
Specified Value	A = 640 ± 10mV

Adjusting method:

1) Select page: 0, address: 01, and set data: 01.
2) Select page: D, address: 97, change the data and set the red level (A) to the specified value.
3) Press the PAUSE button of the adjustment remote commander.
4) Select page: 0, address: 01, and set data: 00.

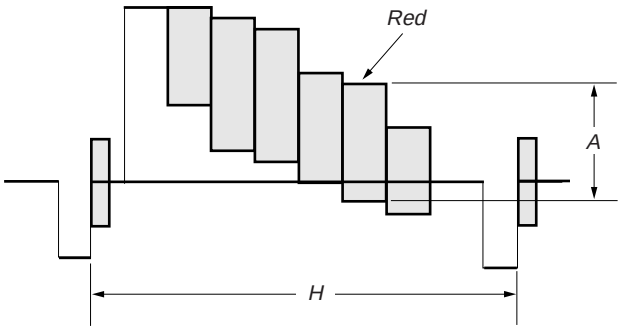

Fig. 5-3-13

8. VIDEO Output Burst Level Adjustment (CB-61 Board)

Set the composite output burst signal level.

Mode	VTR stop
Signal	Color bar signal generated by DCR-VX1000(NTSC) or DCR-VX1000E(PAL) (DV jack input)
Measurement Point	VIDEO jack (75 Ω terminated)
Measuring Instrument	Oscilloscope
Adjustment Page	D
Adjustment Address	A6
Specified Value	A = 286 ± 6mV (NTSC) A = 300 ± 6mV (PAL)

Adjusting method:

1) Select page: 0, address: 01, and set data: 01.
2) Select page: D, address: A6, change the data and set the burst level (A) to the specified value.
3) Press the PAUSE button of the adjustment remote commander.
4) Select page: 0, address: 01, and set data: 00.

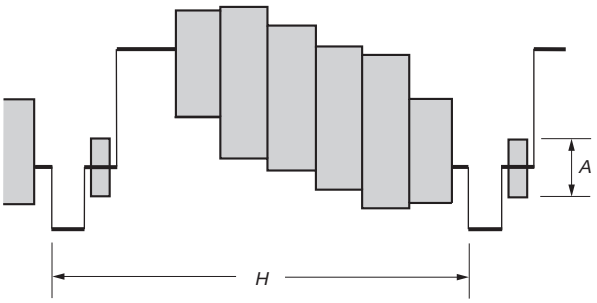

Fig. 5-3-14

9. NPS R-Y Level Adjustment for NTSC model (CB-61 Board)

Adjust the IC1101 CR OUT level, and set the chroma phase.

Mode	VTR stop
Signal	Color bar signal generated by DCR-VX1000(NTSC) (DV jack input)
Measurement Point	VIDEO jack
Measuring Instrument	Vectorscope
Adjustment Page	D
Adjustment Address	97
Specified Value	All color luminance points should settle within each specified frame(⊞).

Adjusting method:

1) Select page: 0, address: 01, and set data: 01.
2) Adjust the GAIN and PHASE of the vectorscope, and set the burst luminance point to the burst position (75% position).
3) Select page: D, address: 97, change the data and settle each color luminance point in each specified frame (⊞).
4) Press the PAUSE button of the adjustment remote commander.
5) Select page: 0, address: 01, and set data: 00.

10. S VIDEO Output Chroma Level Adjustment (CB-61 Board)

Set the chroma signal level of the S video output signal.

Mode	VTR stop
Signal	No signal
Measurement Point	Chroma signal terminal of S VIDEO jack (75 Ω terminated)
Measuring Instrument	Oscilloscope
Adjustment Page	D
Adjustment Address	94
Specified Value	A = 286 ± 6mV (NTSC) A = 300 ± 6mV (PAL)

Adjusting method:

1) Select page: 0, address: 01, and set data: 01.
2) Select page: D, address: 15, after memorizing the data, set the bit value of bit2 to "0". (Refer to "4-3, 3. Bit value discrimination" of "5-4. Service Mode").
3) Select page: D, address: 94, change the data and set the burst signal level (A) to the specified value.
4) Press the PAUSE button of the adjustment remote commander.
5) Select page: D, address: 15, and set the data memorized at step 2).
6) Press the PAUSE button of the adjustment remote commander.
7) Select page: 0, address: 01, and set data: 00.

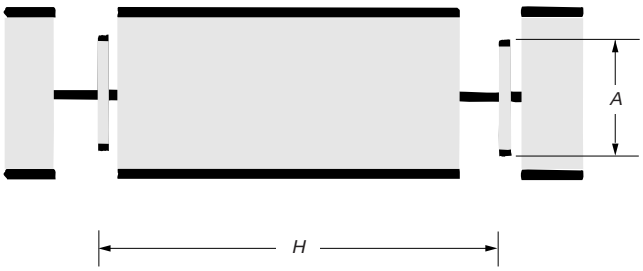

Fig. 5-3-15

11. AFC TC Adjustment (CB-61 Board)

Set the picture frame in recording.

Mode	VTR stop
Signal	75% color bar (VIDEO jack input)
Measurement Point	Y signal terminal of S VIDEO jack (75 Ω terminated)
Measuring Instrument	Oscilloscope
Adjustment Page	D
Adjustment Address	A2
Specified Value	$t_2 - t_1 = 0 \pm 0.05$ μ sec

Adjusting method:

1) Select page: 0, address: 01, and set data: 01.
2) Select page: 2, address: 13, and set data: FE.
3) Check the delay time (t_1).
4) Select page: 2, address: 13, and set data: FF.
5) Select page: D, address: A2, change the data so that the delay time (t_2) is equal to the delay time (t_1) of step 3).
6) Press the PAUSE button of the adjustment remote commander.
7) Select page: 2, address: 13, and set data: 00.
8) Select page: 0, address: 01, and set data: 00.

For NTSC model

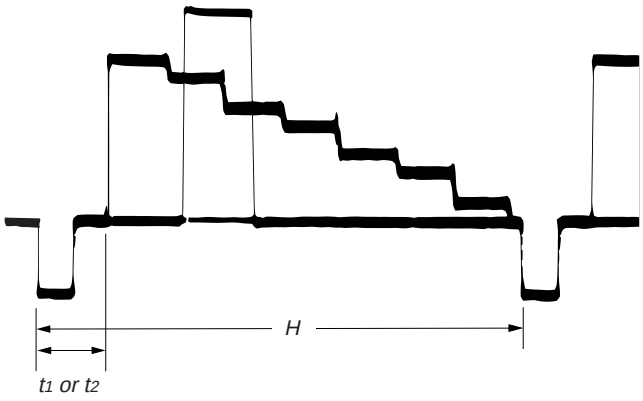

For PAL model

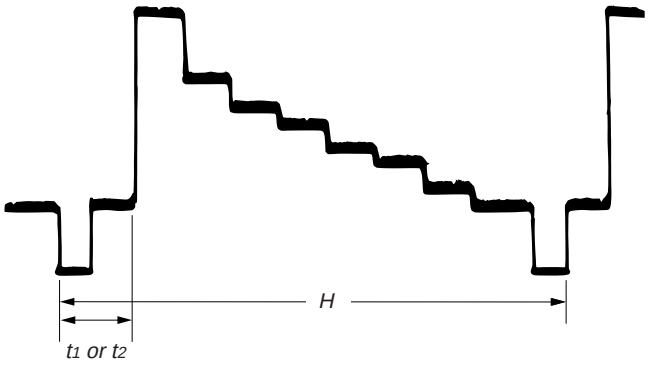

Fig. 5-3-16

12. AFC f_0 Adjustment (CB-61 Board)

Set the free-run frequency of the AFC VCO.

Mode	VTR stop (GV-D900/D900E) Recording (GV-D300/D300E)
Signal	75% color bar (VIDEO jack input)
Measurement Point	Pin ⑳ of CN9928 (AFC ERR)
Measuring Instrument	Digital voltmeter
Adjustment Page	D
Adjustment Address	A1
Specified Value	A = 1.9 ± 0.1Vdc

Note: Don't insert any plug in the S VIDEO jack.

Adjusting method:

1) Select page: 0, address: 01, and set data: 01.
2) Select page: D, address: A1, change the data and set the AFC error voltage (A) to the specified value.
3) Press the PAUSE button of the adjustment remote commander.
4) Select page: 0, address: 01, and set data: 00.

13. Decoder APC Adjustment (CB-61 Board)

Set the free-run frequency of the decoder VXO.

Mode	VTR stop (GV-D900/D900E) Recording (GV-D300/D300E)
Signal	No signal (VIDEO jack input) (Note)
Measurement Point	Pin ① of CN9928 (DEC FSC)
Measuring Instrument	Frequency counter
Adjustment Page	D
Adjustment Address	9F
Specified Value	f = 3579545 ± 50Hz (NTSC) f = 4433619 ± 50Hz (PAL)

Note: Insert a plug in the VIDEO jack.

Adjusting method:

1) Select page: 0, address: 01, and set data: 01.
2) Select page: D, address: 9F, change the data and set the DEC FSC frequency (f) to the specified value.
3) Press the PAUSE button of the adjustment remote commander.
4) Select page: 0, address: 01, and set data: 00.

14. Decoder ACC Adjustment (CB-61 Board)

Set the decoder ACC gain.

Mode	VTR stop (GV-D900/D900E) Recording (GV-D300/D300E)
Signal	75% color bar (VIDEO jack input)
Measurement Point	Pin ⑰ of CN9928 (DEC B-Y)
Measuring Instrument	Oscilloscope
Adjustment Page	D
Adjustment Address	9E
Specified Value	A = 325 ± 20mV

Adjusting method:

1) Select page: 0, address: 01, and set data: 01.
2) Select page: D, address: 9E, change the data and set the DEC B-Y signal level (A) to the specified value.
3) Press the PAUSE button of the adjustment remote commander.
4) Select page: 0, address: 01, and set data: 00.

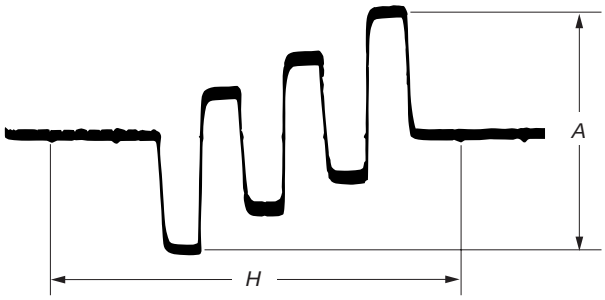

Fig. 5-3-17

15. Decoder HUE Adjustment (CB-61 Board)

Set the decoder hue.

Mode	VTR stop (GV-D900/D900E) Recording (GV-D300/D300E)
Signal	75% color bar (VIDEO jack input)
Measurement Point	Pin ⑰ of CN9928 (DEC B-Y)
Measuring Instrument	Oscilloscope
Adjustment Page	D
Adjustment Address	A0
Specified Value	A-B = 0 ± 10mV (NTSC) A = Minimum amplitude (PAL)

Adjusting method:

1) Select page: 0, address: 01, and set data: 01.
2) NTSC model
   Select page: D, address: A0, change the data so that the voltage (A) between the yellow and cyan is equal to the voltage (B) between the green and magenta.
   PAL model
   Select page: D, address: A0, change the data so that the waveform dose not appear double.
3) Press the PAUSE button of the adjustment remote commander.
4) Select page: 0, address: 01, and set data: 00.

For NTSC model

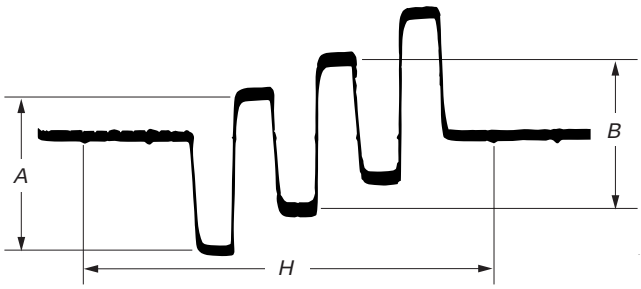

For PAL model

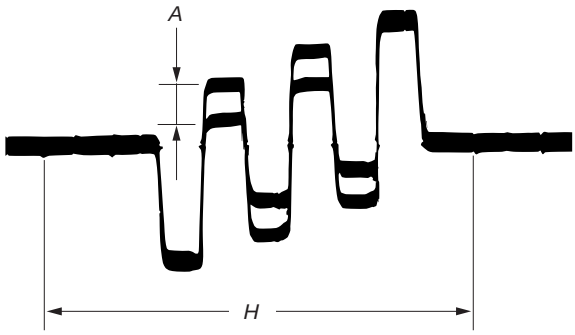

Fig. 5-3-18

16. Y AD Clamp Adjustment (CB-61 Board)

Set the IC9004 clamp level of the Y AD OUT.

Mode	VTR stop (GV-D900/D900E) Recording (GV-D300/D300E)
Signal	75% color bar (VIDEO jack input)
Measurement Point	DDS display of LCD or TV monitor (Note1), or Page: 2, address: 1C display data of the adjustment remote commander
Measuring Instrument	
Adjustment Page	D
Adjustment Address	B6
Specified Value	0F to 11

Note1: The two digits of the display data of the LCD and TV monitor is the object data.

HI XX XXXX
└── Object data

Note2: How to connect the TV monitor.
1) Use the LASER LINK function.
2) Connect the TV monitor to S VIDEO jack.
   In this case, select page: 2, address: 13, and set data: FE. After completing adjustments, set data: 00 to the address.

Adjusting method:

1) Select page: 0, address: 01, and set data: 01.
2) Select page: D, address: 11, set data: 24, and press the PAUSE button of the adjustment remote commander.
3) Select page: 2, address: 96, and set data: 40.
4) Select page: 2, address: 97, and set data: 18.
5) Select page: D, address: B6, change the data and adjust the DDS display data (or the display data of page: 2, address: 1C) to the specified value. (The data of address: B6 should be “00” to “99”.)
6) Press the PAUSE button of the adjustment remote commander.

Processing after Completing Adjustments

1) Select page: D, address: 11, set data: 00, and press the PAUSE button of the adjustment remote commander.
2) Select page: 0, address: 01, and set data: 00.
3) Select page: 2, address: 96, and set data: 00.
4) Select page: 2, address: 97, and set data: 00.

17. CR AD Clamp Adjustment (CB-61 Board)

Set the clamp level of the IC9004 CR AD OUT.

Mode	VTR stop (GV-D900/D900E) Recording (GV-D300/D300E)
Signal	75% color bar (VIDEO jack input)
Measurement Point	DDS display of LCD or TV monitor (Note), or Page: 2, address: 1D display data of the adjustment remote commander
Measuring Instrument	
Adjustment Page	D
Adjustment Address	B4
Specified Value	FF or 00 or 01

Note: Note: The two digits of the display data of the LCD and TV monitor is the object data.

HI XX XXXX
└──Object data

Adjusting method:

1) Select page: 0, address: 01, and set data: 01.
2) Select page: D, address: 11, set data: 24, and press the PAUSE button of the adjustment remote commander.
3) Select page: 2, address: 96, and set data: 40.
4) Select page: 2, address: 97, and set data: 18.
5) Select page: D, address: B4, set data: 4C, and press the PAUSE button of the adjustment remote commander.
6) Select page: D, address: B5, set data: 4C, and press the PAUSE button.
7) Select page: D, address: B4, change the data and adjust the DDS display data (or the display data of page: 2, address: 1D) to the specified value. (The data of address: B4 should be "00" to "99".)
8) Press the PAUSE button of the adjustment remote commander.
9) Perform "CB AD Clamp Adjustment".

Processing after Completing Adjustments

1) Select page: D, address: 11, set data: 00, and press the PAUSE button of the adjustment remote commander.
2) Select page: 0, address: 01, and set data: 00.
3) Select page: 2, address: 96, and set data: 00.
4) Select page: 2, address: 97, and set data: 00.

18. CB AD Clamp Adjustment (CB-61 Board)

Set the clamp level of the IC9004 CB AD OUT.

Mode	VTR stop (GV-D900/D900E) Recording (GV-D300/D300E)
Signal	75% color bar (VIDEO jack input)
Measurement Point	DDS display of LCD or TV monitor (Note1), or Page: 2, address: 1E display data of the adjustment remote commander
Measuring Instrument	
Adjustment Page	D
Adjustment Address	B5
Specified Value	FF or 00 or 01

Note1: Note: The two digits of the display data of the LCD and TV monitor is the object data.

HI XX XXXX
└──Object data

Note2: Perform "CR AD Clamp Adjustment" before this adjustment.

Adjusting method:

1) Select page: 0, address: 01, and set data: 01.
2) Select page: D, address: 11, set data: 24, and press the PAUSE button of the adjustment remote commander.
3) Select page: 2, address: 96, and set data: 40.
4) Select page: 2, address: 97, and set data: 18.
5) Select page: D, address: B5, change the data and adjust the DDS display data (or the display data of page: 2, address: 1E) to the specified value. (The data of address: B5 should be "00" to "99".)
6) Press the PAUSE button of the adjustment remote commander.

Processing after Completing Adjustments

1) Select page: D, address: 11, set data: 00, and press the PAUSE button of the adjustment remote commander.
2) Select page: 0, address: 01, and set data: 00.
3) Select page: 2, address: 96, and set data: 00.
4) Select page: 2, address: 97, and set data: 00.

19. Y AD Level Adjustment (CB-61 Board)

Set the IC9004 Y AD OUT level.

Mode	VTR stop (GV-D900/D900E) Recording (GV-D300/D300E)
Signal	75% color bar (VIDEO jack input)
Measurement Point	DDS display of LCD or TV monitor (Note1), or Page: 2, address: 1C display data of the adjustment remote commander
Measuring Instrument	
Adjustment Page	D
Adjustment Address	9B
Specified Value	EA to EC (NTSC) ED to EF (PAL)

Note1: Note: The two digits of the display data of the LCD and TV monitor is the object data.

HI XX XXXX
└──Object data

Note2: Use the 75% color bar signal shown in Fig. 5-3-19.

Adjusting method:

1) Select page: 0, address: 01, and set data: 01.
2) Select page: D, address: 11, set data: 24, and press the PAUSE button of the adjustment remote commander.
3) Select page: 2, address: 96, and set data: 70(NTSC) or 40(PAL).
4) Select page: 2, address: 97, and set data: 50(NTSC) or 30(PAL).
5) Select page: D, address: 9B, change the data and adjust the DDS display data (or the display data of page: 2, address: 1C) to the specified value.
6) Press the PAUSE button of the adjustment remote commander.

Processing after Completing Adjustments

1) Select page: D, address: 11, set data: 00, and press the PAUSE button of the adjustment remote commander.
2) Select page: 0, address: 01, and set data: 00.
3) Select page: 2, address: 96, and set data: 00.
4) Select page: 2, address: 97, and set data: 00.

20. CR AD Adjustment (CB-61 Board)

Set the IC9004 CR AD OUT level.

Mode	VTR stop (GV-D900/D900E) Recording (GV-D300/D300E)
Signal	75% color bar (VIDEO jack input)
Measurement Point	DDS display of LCD or TV monitor (Note1), or Page: 2, address: 1D display data of the adjustment remote commander
Measuring Instrument	
Adjustment Page	D
Adjustment Address	9C
Specified Value	4D to 4F (NTSC) 53 to 55 (PAL)

Note1: Note: The two digits of the display data of the LCD and TV monitor is the object data.

HI XX XXXX
└──Object data

Note2: Use the 75% color bar signal shown in Fig. 5-3-19.

Adjusting method:

1) Select page: 0, address: 01, and set data: 01.
2) Select page: D, address: 11, set data: 24, and press the PAUSE button of the adjustment remote commander.
3) Select page: 2, address: 96, and set data: 40.
4) Select page: 2, address: 97, and set data: B0(NTSC) or A0(PAL).
5) Select page: D, address: 9C, change the data and adjust the DDS display data (or the display data of page: 2, address: 1D) to the specified value.
6) Press the PAUSE button of the adjustment remote commander.

Processing after Completing Adjustments

1) Select page: D, address: 11, set data: 00, and press the PAUSE button of the adjustment remote commander.
2) Select page: 0, address: 01, and set data: 00.
3) Select page: 2, address: 96, and set data: 00.
4) Select page: 2, address: 97, and set data: 00.

For NTSC model

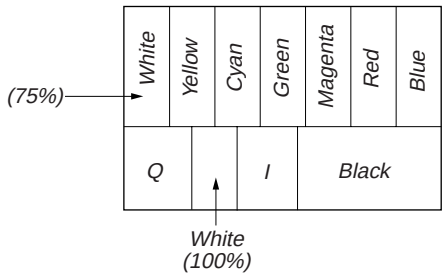

For PAL model

Fig. 5-3-19

21. CB AD Level Adjustment (CB-61 Board)

Set the IC9004 CB AD OUT level.

Mode	VTR stop (GV-D900/D900E) Recording (GV-D300/D300E)
Signal	75% color bar (VIDEO jack input)
Measurement Point	DDS display of LCD or TV monitor (Note1), or Page: 2, address: 1E display data of the adjustment remote commander
Measuring Instrument	
Adjustment Page	D
Adjustment Address	9D
Specified Value	4D to 4F (NTSC) 53 to 55 (PAL)

Note1: Note: The two digits of the display data of the LCD and TV monitor is the object data.

HI XX XXXX
└── Object data

Note2: Use the 75% color bar signal shown in Fig. 5-3-19.

Adjusting method:

1) Select page: 0, address: 01, and set data: 01.
2) Select page: D, address: 11, set data: 24, and press the PAUSE button of the adjustment remote commander.
3) Select page: 2, address: 96, and set data: 40.
4) Select page: 2, address: 97, and set data: C0(NTSC) or B0(PAL).
5) Select page: D, address: 9D, change the data and adjust the DDS display data (or the display data of page: 2, address: 1E) to the specified value.
6) Press the PAUSE button of the adjustment remote commander.

Processing after Completing Adjustments

1) Select page: D, address: 11, set data: 00, and press the PAUSE button of the adjustment remote commander.
2) Select page: 0, address: 01, and set data: 00.
3) Select page: 2, address: 96, and set data: 00.
4) Select page: 2, address: 97, and set data: 00.

3-5-4. BIST Check

1. Playback System Check

1) Set the POWER switch to ON.
2) Connect the adjustment remote commander and set the HOLD switch to HOLD (SERVICE) position.
3) Playback the BIST check tape. (XH5-6 (NTSC), XH5-6P (PAL))

IC1701 (D1) Playback System Check

4) Select page: 4, address: 11, and set data: 04, then press the PAUSE button.
5) Select page: 4, address: 11, and set data: 00, then press the PAUSE button.
6) Select page: 4, address: 13, and set data: 03, then press the PAUSE button.
   (The data will be automatically return to "00".)
7) When the IC1701 (D1) → IC1601 (U1) playback system is normal, following data will be displayed in page: 4, address: 14 and 15.

Page	Address	Data
4	15	E5 (NTSC), 27 (PAL)
4	14	11 (NTSC), CA (PAL)

8) When the IC1701 (D1) → IC3501 (INDI) playback system is normal, following data will be displayed in page: 4, address: 16 and 17.

Page	Address	Data
4	17	C0 or BA (NTSC), DC (PAL)
4	16	6E or 04 (NTSC), 44 (PAL)

9) When the IC1701 (D1) → IC1901 (A1) playback system is normal, following data will be displayed in page: 4, address: 18 and 19.

Page	Address	Data
4	19	33 or B2 (NTSC), A2 (PAL)
4	18	59 or 19 (NTSC), 03 (PAL)

IC1901 (A1) Playback System Check

10) Select page: 4, address: 11, and set data: 10, then press the PAUSE button.
11) Select page: 4, address: 11, and set data: 00, then press the PAUSE button.
12) Select page: 4, address: 13, and set data: 04, then press the PAUSE button.
    (The data will be automatically return to "00".)
13) When the IC1901 (A1) playback system is normal, following data will be displayed in page: 4, address: 14 and 15.

Page	Address	Data
4	15	7B (NTSC), CC (PAL)
4	14	B5 (NTSC), C0 (PAL)

14) Select page: 4, address: 11, and set data: 08, then press the PAUSE button.
15) Select page: 4, address: 13, and set data: 07, then press the PAUSE button.
    (The data will be automatically return to "00".)
16) Select page: 4, address: 11, and set data: 00, then press the PAUSE button.
17) Perform "Recording System Check".

2. Recording System Check

Note: Perform "Playback System Check" before this check.

1) Playback the BIST check tape.
2) Input the following data in order.
   Note: Press the PAUSE button each time set the data.

Page	Address	Data
4	41	01
4	0F	02
4	0E	01
4	40	01
4	0F	0A
4	40	00
4	40	01
4	0F	0E
4	40	00
4	40	01
4	0F	8E
4	40	00

3) While keep the HOLD switch of the adjustment remote commander at ON (SERVICE) position, eject the BIST check tape and insert a tape for recording in place of the tape.
4) Select page: 0, address: 01, and set data: 01.
5) Select page: D, address: 15, after memorizing the data, set data: 07 and then press the PAUSE button.
6) While keep the HOLD switch of the adjustment remote commander at ON (SERVICE) position, set to the VTR recording mode.
7) Select page: 4, address: 11, and set data: 02, then press the PAUSE button.
8) Select page: 4, address: 13, and set data: 02, then press the PAUSE button.
9) Select page: 4, address: 11, and set data: 00, then press the PAUSE button.

IC1701 (D1) Recording System Check

10) Select page: 3, address: 01, and set data: 0D, then press the PAUSE button.
11) Select page: 4, address: 1C, and set data: FF, then press the PAUSE button.
12) Select page: 4, address: 11, and set data: 04, then press the PAUSE button.
13) Select page: 4, address: 11, and set data: 00, then press the PAUSE button.
14) Select page: 4, address: 13, and set data: 03, then press the PAUSE button.
    (The data will be automatically return to "00".)
15) When the IC1601 (U1) → IC1701 (D1) recording system is normal, following data will be displayed in page: 4, address: 14 and 15.

Page	Address	Data
4	15	C6 (NTSC), F8 (PAL)
4	14	90 (NTSC), 3E (PAL)

16) When the IC1701 (D1) → IC3501 (INDI) recording system is normal, following data will be displayed in page: 4, address: 16 and 17.

Page	Address	Data
4	17	19 (NTSC), 2A (PAL)
4	16	AA (NTSC), AE (PAL)

17) When the IC1901 (A1) → IC1701 (D1) recording system is normal, following data will be displayed in page: 4, address: 18 and 19.

Page	Address	Data
4	19	76 (NTSC), CE (PAL)
4	18	B9 (NTSC), E7 (PAL)

18) When the IC1701 (D1) → IC6101 (DX) recording system is normal, following data will be displayed in page: 4, address: 1A and 1B.

Page	Address	Data
4	1B	98 (NTSC), DC (PAL)
4	1A	E6 (NTSC), 85 (PAL)

19) Select page: D, address: 15, and set the data memorized at step 5).
20) Press the PAUSE button of the adjustment remote commander.
21) Select page: 0, address: 01, and set data: 00.

3-6. IR TRANSMITTER ADJUSTMENTS

Adjust using a IR receiver jig (J-6082-383-A).

Switch setting:
LASER LINK ..... ON (Red LED is lit)

1. IR Video Carrier Frequency Adjustment (CB-61 board)

Mode	VTR stop
Signal	Arbitrary
Measurement Point	Pin ⑤ of CN003 of IR receiver jig (RF) (Or Pin ⑯ of IC8401)
Measuring Instrument	Frequency counter
Adjustment Page	D
Adjustment Address	90
Specified Value	f = 11.85 ± 0.05 MHz

Connection of Equipment
Connect the measuring device as shown in the following figure, and adjust.

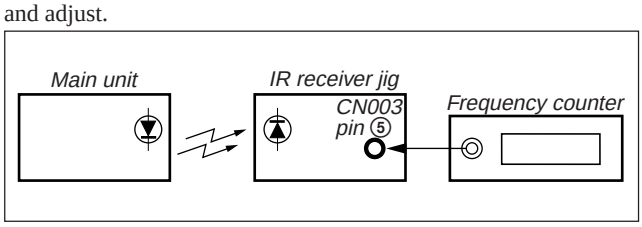

Fig. 5-3-20

Adjusting method:
1) Select page: 0, address: 01, and set data: 01.
2) Select page: 2, address: 12, set data: 10, and press the PAUSE button of the adjustment remote commander.
3) Select page: D, address: 90, change the data, and set the video carrier frequency (f) to the specified value.
4) Press the PAUSE button of the adjustment remote commander.
5) Select page: 2, address: 12, set data: 00, and press the PAUSE button of the adjustment remote commander.
6) Select page: 0, address: 01, and set data: 00.

2. IR Video Deviation Adjustment (CB-61 board)

Mode	Playback
Signal	Alignment tape: For audio operation check (XH5-3 (NTSC)) (XH5-3P (PAL))
Measurement Point	VIDEO OUT terminal of IR receiver jig (Terminated at 75 Ω)
Measuring Instrument	Oscilloscope
Adjustment Page	D
Adjustment Address	91
Specified Value	A = 1.00 ± 0.05 V

Connection of Equipment:
Connect the measuring device as shown in the following figure, and adjust.

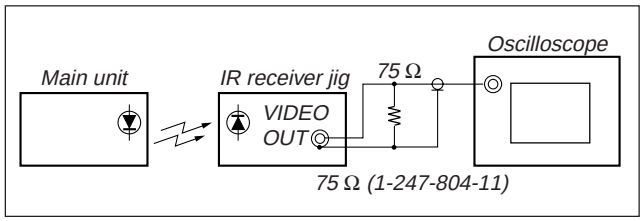

Fig. 5-3-21

Adjusting method:
1) Select page: 0, address: 01, and set data: 01.
2) Select page: D, address: 91, and change the data, set the video signal amplitude (A) to the specified value.
3) Press the PAUSE button of the adjustment remote commander.
4) Select page: 0, address: 01, and set data: 00.

For NTSC model

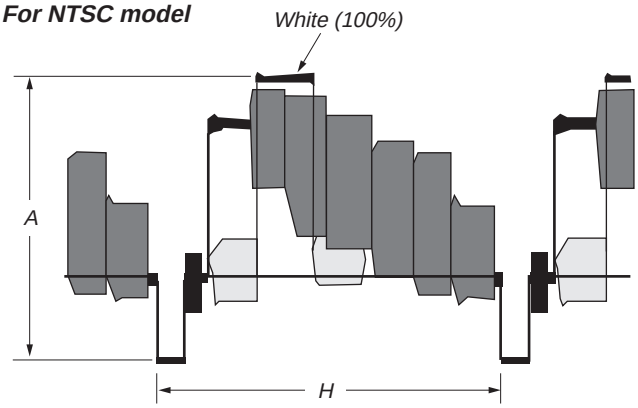

For PAL model

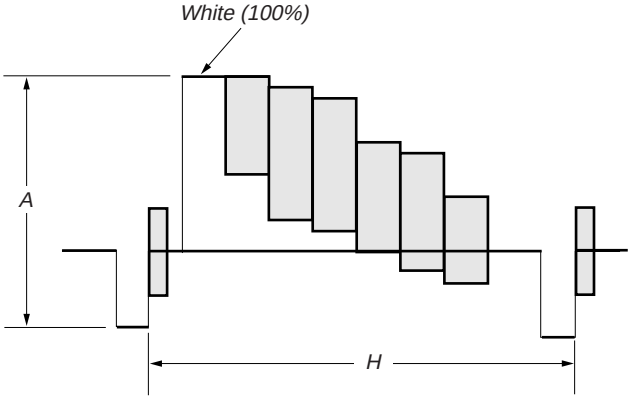

Fig. 5-3-22

3. IR Audio Deviation Adjustment (CB-61 board)

Mode	VTR stop
Signal	400Hz, –7.5dBs : AUDIO jack left and right Color bar : VIDEO jack
Measurement Point	AUDIO L terminal and AUDIO R terminal of IR receiver jig (Terminated at 47kΩ)
Measuring Instrument	Audio level meter
Adjustment Page	D
Adjustment Address	92
Specified Value	Signal level: –7.5 ± 1.0 dBs Level difference of L and R: Below 2dB

Connection of Equipment:
Connect the measuring device as shown in the following figure, and adjust.

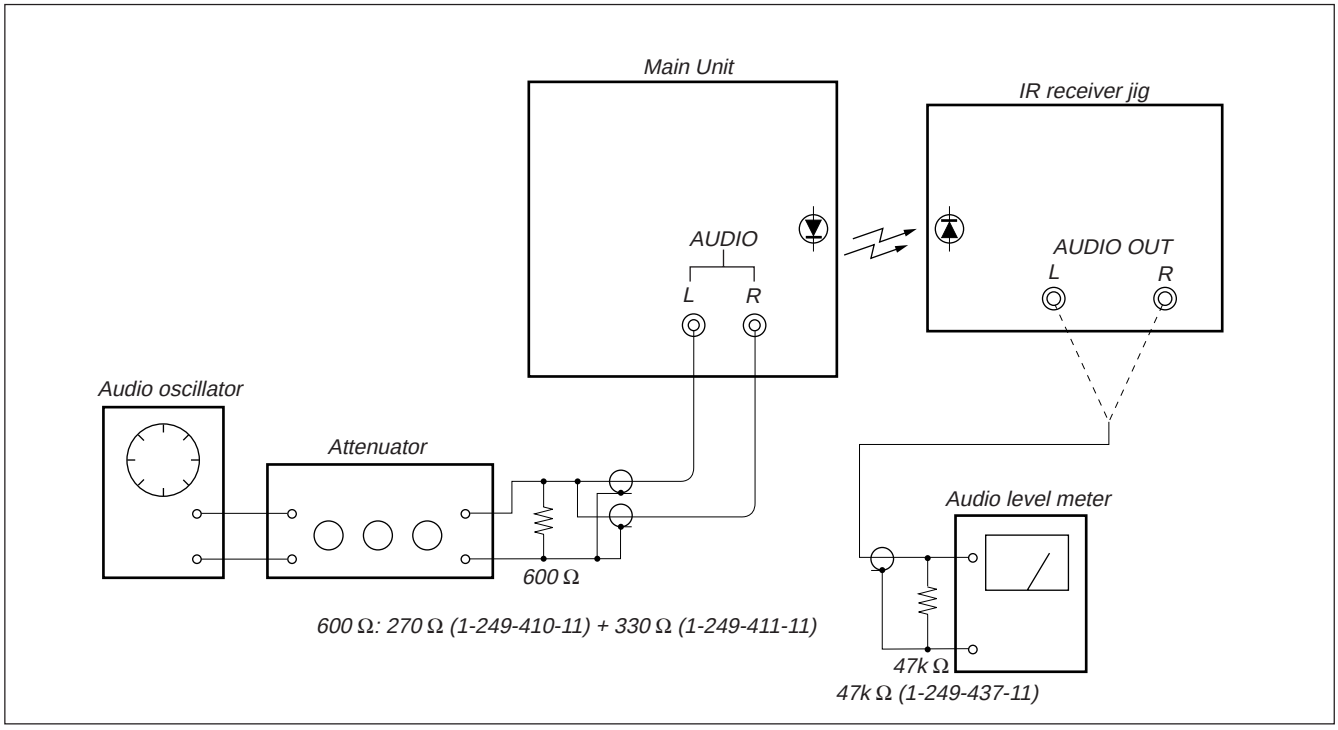

Fig. 5-3-23

Adjusting method:
1) Select page: 0, address: 01, and set data: 01.
2) Only for the model without LCD screen, select page: D, address: 19, after noting down data, set data: 01, and press the PAUSE button of the adjustment remote commander.
3) Connect the audio level meter to the AUDIO L terminal of the IR receiver jig.
4) Select page: D, address: 92, change the data and set the 400Hz audio signal level to the specified value.
5) Press the PAUSE button of the adjustment remote commander.
6) Connect the audio level meter to the AUDIO R terminal of the IR receiver jig.
7) Check that the 400Hz audio signal level is within the specified value. If outside, repeat from step 2).
8) Only for the model without LCD screen, select page: D, address: 19, set data noted down at step 2), and press the PAUSE button of the adjustment remote commander.
9) Select page: 0, address: 01, and set data: 00.

3-7. AUDIO SYSTEM ADJUSTMENTS

• Perform the adjustment using the color bar signal as a video signal input for the VIDEO jack.

[Connection of Audio System Measuring Devices]

Connect the audio system measuring devices as shown in Fig. 5-3-24.

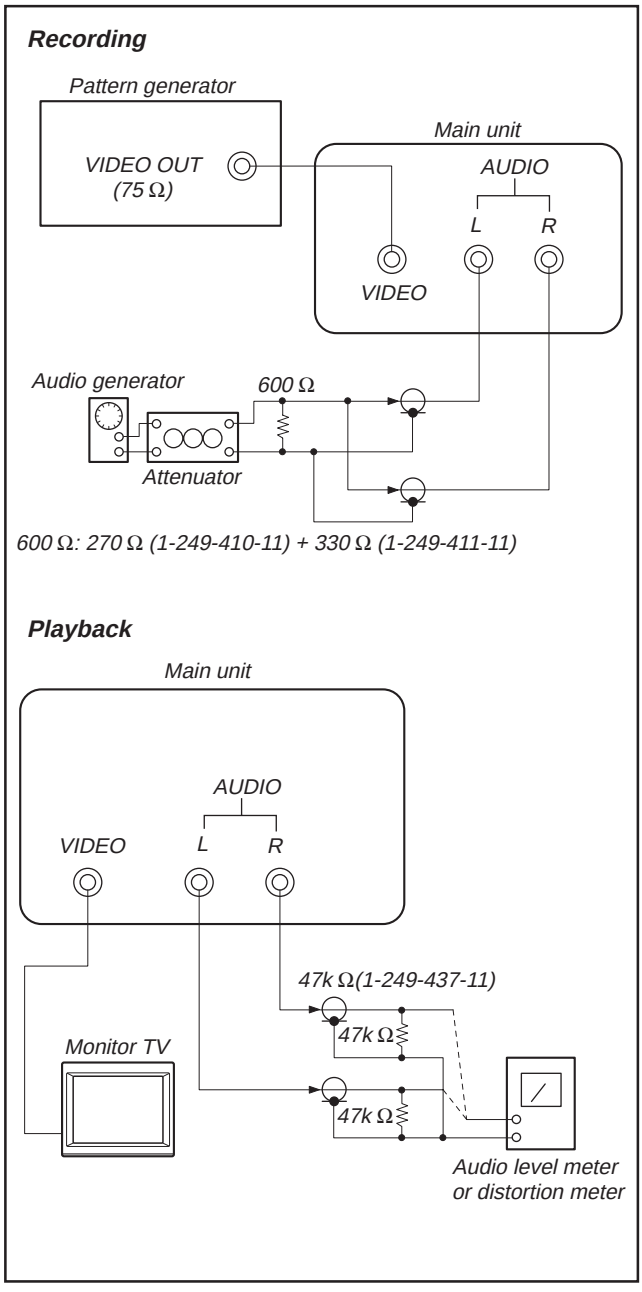

Fig. 5-3-24.

1. Playback Level Check

Mode	Playback
Signal	Alignment tape: For audio operation check (XH5-3 (NTSC)) (XH5-3P (PAL))
Measurement Point	AUDIO jack left or right
Measuring Instrument	Audio level meter and frequency counter
Specified Value	32 kHz mode: 1 kHz, +3.0 ± 2.0dBs 48 kHz mode: 1 kHz, +3.0 ± 2.0dBs 44.1 kHz mode EMP OFF section: 7.35kHz +2.0 ± 2.0dBs. 44.1 kHz mode EMP ON section: –6 ± 2 dB from the signal level during EMP OFF.

Checking Method

1) Check that the playback signal level is the specified value.

2. Overall Level Characteristics Check

Mode	Recording and playback
Signal	400Hz, –7.5dBs signal: AUDIO jack left and right
Measurement Point	AUDIO jack left or right
Measuring Instrument	Audio level meter
Specified Value	–7.5 ± 3.0dBs

Checking Method

1) Input the 400Hz, -7.5dBs signal in the AUDIO jack left and right.
2) Record the signal.
3) Playback the recorded section.
4) Check that the 400Hz signal level is the specified value.

3. Overall Separation Check

Mode	Recording and playback
Signal	400Hz, –7.5dBs signal: AUDIO jack <right> [left] (Insert a shorting plug to AUDIO jack <left> [right])
Measurement Point	AUDIO jack <left> [right]
Measuring Instrument	Audio level meter
Specified Value	Below –40dBs (IHF-A filter ON)

< >: Left channel check
[ ] : Right channel check

Checking Method

1) Input the 400Hz, –7.5dBs signal in the AUDIO jack <right> [left] only. (Insert a shorting plug to AUDIO jack <left> [right])
2) Record the signal.
3) Playback the recorded section.
4) Check that the signal level of the AUDIO jack <left> [right] is the specified value.

4. Overall Noise Level Check

Mode	Recording and playback
Signal	No signal: Insert a shorting plug in the AUDIO jack left and right
Measurement Point	AUDIO jack left or right
Measuring Instrument	Audio level meter
Specified Value	Below –45dBs (IHF-A filter ON, 20kHz LPF ON)

Checking Method

1) Insert a shorting plug in the AUDIO jack left and right.
2) Record in the signal.
3) Playback the recorded section.
4) Check that the noise level is the specified value.

3-8. LCD SYSTEM ADJUSTMENT (GV-D900/D900E)

Note1: The back light (fluorescent tube) is driven by a high voltage AC power supply. Therefore, do not touch the back light holder to avoid electrical shock.
Note2: When replacing the LCD unit, be careful to prevent damages caused by static electricity.
Note3: Set the LCD BRIGHT (IO-64 board S103,104) to the center.
Note4: Before perform the LCD system adjustment, check that the specified value of "Base Band Block Adjustments" of "VIDEO SYSTEM ADJUSTMENTS" is satisfied.

[Adjusting connector]

Most of the measuring points for adjusting the LCD display are concentrated in the following connector.
CN9925 of the CB-61 board
Connect the Measuring Instruments via the CPC-10 jig (J-6082-424-A).
The following table shows the Pin No. and signal name of the connector.

Pin No.	Signal name	Pin No.	Signal name
1	VR	6	C SYNC
2	VG	7	HDB
3	VB	8	SRT
4	V COM	9	FRP
5	GND		

[Video input signal for adjustments]

If stated as "10-step stair-step" in the signal column, input the 10-step stair-step signal in the video input terminal as the video input signal for the adjusting. Check that the input signal level is 1.00 Vp-p before adjusting.

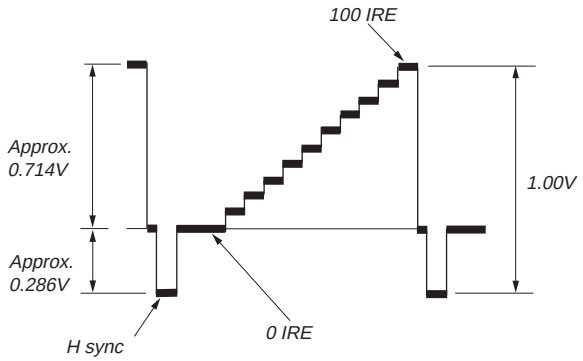

Fig. 5-3-25. 10 steps star-steps

1. LCD Initial Data Input

Mode	VTR stop
Signal	Arbitrary
Adjustment Page	D
Adjustment Address	60 to 68, 6A to 6F

Adjusting method:

1) Select page: 0, address:01, and set data: 01.
2) Select page: D, and input the data in the following table.
   Note: To write in the non-volatile memory (EEPROM), press the PAUSE button of the adjustment remote commander each time to set the data.
3) Select page: 0, address:01, and set data: 00.

Address	Data		Remark
	NTSC	PAL	
60	75	96	Hue adjustment
61	71	76	White balance adjustment
62	71	76	White balance adjustment
63	74	7F	Contrast adjustment
64	CA	CA	PANEL –19V adjustment
65	8E	86	V-COM adjustment
66	7F	7F	Fixed value
67	7E	7E	Fixed value
68	5E	6A	Horizontal position adjustment
6A	50	50	Fixed value
6B	50	50	Fixed value
6C	7E	7A	Bright adjustment
6D	8E	6E	Color adjustment
6E	32	32	Fixed value
6F	44	22	Fixed value

2. PANEL –19V Adjustment (CB-61 board)

Mode	VTR stop
Signal	No signal
Measurement Point	Pin ⑲ of CN9928 (CPC VGL –18V)
Measuring Instrument	Digital voltmeter
Adjustment Page	D
Adjustment Address	64
Specified Value	A = –19.0 ± 0.5Vdc

Adjusting method:

1) Select page: 0, address: 01, and set data: 01.
2) Select page: D, address: 64, change the data and set the DC voltage (A) to the specified value.
3) Press the PAUSE button of the adjustment remote commander.
4) Select page: 0, address: 01, and set data: 00.

3. Horizontal Position Adjustment (CB-61 board)

Adjust the position of the image.
If its position is not correct. it will slip to the right or left.

Mode	VTR stop
Signal	Color bar
Measurement Point	CH1: Pin ⑨ of CN9925 (FRP) CH2: Pin ⑥ of CN9925 (CSYNC)
Measuring Instrument	Oscilloscope Trigger source: CH1
Adjustment Page	D
Adjustment Address	68
Specified Value	T = 4.81 ± 0.10 μ sec

Adjusting method:

1) Select page: 0, address: 01, and set data: 01.
2) Select page: D, address: 68, change the data and set the delay time (T) to the specified value.
3) Press the PAUSE button of the adjustment remote commander.
4) Select page: 0, address: 01, and set data: 00.

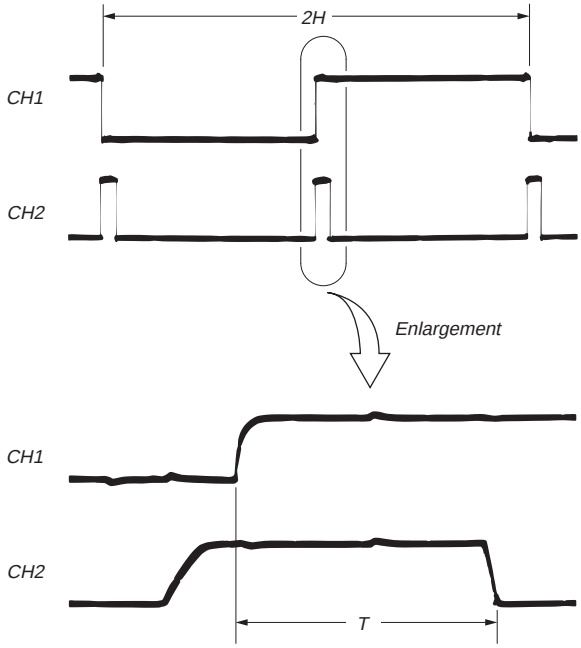

Fig. 5-3-26.

4. Bright Adjustment (CB-61 board)

Set the level of the VIDEO signal for driving the LCD to the specified value. If deviated, the screen image will be blackish or saturated (whitish).

Mode	VTR stop
Signal	10-step stair-step signal or color bar signal whose chroma and burst signals are turned off
Measurement Point	Pin ② of CN9925 (VG)
Measuring Instrument	Oscilloscope
Adjustment Page	D
Adjustment Address	6C
Specified Value	A = 4.00 ± 0.05V (NTSC) A = 4.15 ± 0.05V (PAL)

Note: Perform "4. Bright Adjustment" and "5. Contrast Adjustment" alternately until each specified value is satisfied.

Adjusting method:

1) Select page: 0, address: 01, and set data: 01.
2) Select page: D, address: 6C, change the data and set the voltage (A) between the reversed waveform pedestal and non-reversed waveform pedestal to the specified value.
   (The data of address: 6C should be "41" to "BF".)
3) Press the PAUSE button of the adjustment remote commander.
4) Select page: 0, address: 01, and set data: 00.
5) Perform "Contrast Adjustment".

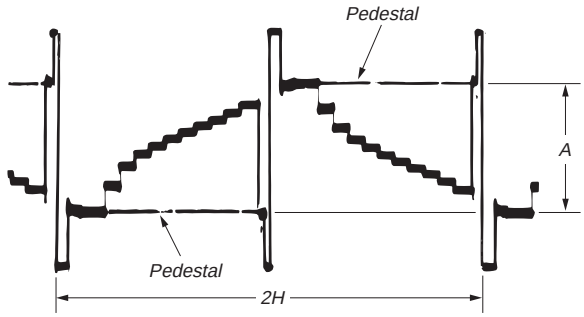

Fig. 5-3-27.

5. Contrast Adjustment (CB-61 board)

Set the level of the VIDEO signal for driving the LCD to the specified value. If deviated, the screen image will be blackish or saturated (whitish).

Mode	VTR stop
Signal	10-step stair-step signal or color bar signal whose chroma and burst signals are turned off
Measurement Point	Pin ② of CN9925 (VG)
Measuring Instrument	Oscilloscope
Adjustment Page	D
Adjustment Address	63
Specified Value	A = 2.90 ± 0.05V (NTSC) A = 3.22 ± 0.05V (PAL)

Adjusting method:

1) Select page: 0, address: 01, and set data: 01.
2) Select page: D, address: 63, change the data and set the voltage (A) between the 0 IRE (pedestal) and 90 IRE to the specified value.
3) Press the PAUSE button of the adjustment remote commander.
4) Select page: 0, address: 01, and set data: 00.
5) Check that the specified value of "Bright Adjustment" is satisfied, if not perform "Bright Adjustment".

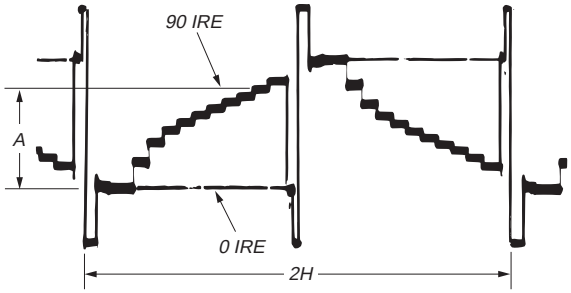

Fig. 5-3-28.

6. Color Adjustment for NTSC model (CB-61 board)

Set the color saturation to the standard value. If deviated, the color will be to dark or light.

Mode	VTR stop
Signal	Color bar
Measurement Point	Pin ② of CN9925 (VG)
Measuring Instrument	Oscilloscope
Adjustment Page	D
Adjustment Address	6D
Specified Value	A = 0.40 ± 0.05V

Adjusting method:

1) Select page: 0, address: 01, and set data: 01.
2) Select page: D, address: 63, after noting down the data, add 10 (heximadecimal number) to the data.
3) Press the PAUSE button of the adjustment remote commander.
4) Select page: D, address: 6D, change the data and set the voltage (A) between the white(75%) and green to the specified value. (The data of address: 6D should be “48” to “B7”.)
5) Press the PAUSE button of the adjustment remote commander.
6) Select page: D, address: 63, set the data noted down at step 2), and press the PAUSE button.
7) Select page: 0, address: 01, and set data: 00.

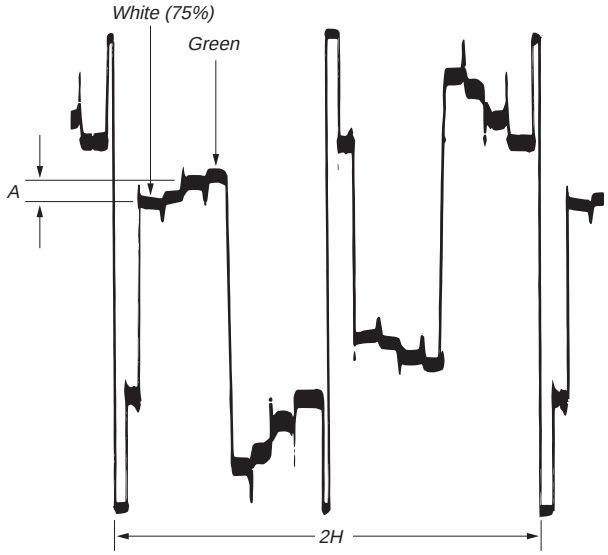

Fig. 5-3-29.

7. Hue Adjustment for NTSC model (CB-61 board)

Set the hue to the standard value. If deviated, the color will be to unnatural.

Mode	VTR stop
Signal	Color bar
Measurement Point	Pin ② of CN9925 (VG)
Measuring Instrument	Oscilloscope
Adjustment Page	D
Adjustment Address	60
Specified Value	A = 0.15 ± 0.05V

Adjusting method:

1) Select page: 0, address: 01, and set data: 01.
2) Select page: D, address: 63, after noting down the data, add 10 (heximadecimal number) to the data.
3) Press the PAUSE button of the adjustment remote commander.
4) Select page: D, address: 60, change the data and set the voltage (A) between the yellow and cyan to the specified value. (The data of address: 60 should be “48” to “B7”.)
5) Press the PAUSE button of the adjustment remote commander.
6) Select page: D, address: 63, set the data noted down at step 2), and press the PAUSE button.
7) Select page: 0, address: 01, and set data: 00.

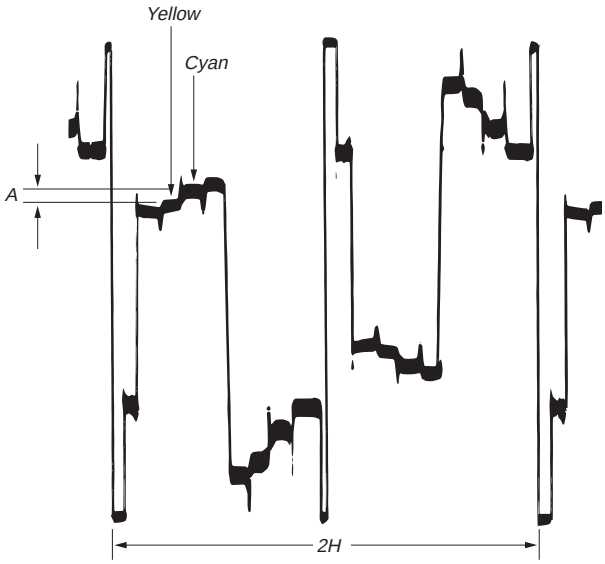

Fig. 5-3-30.

8. Burst Cleaning Adjustment for PAL model (CB-61 board)

Adjust to the optimum PAL chroma signal demodulation phase. If the phase is not correct, moire distortion noises will stand out.

Mode	VTR stop
Signal	Color bar
Measurement Point	Pin ② of CN9925 (VG)
Measuring Instrument	Oscilloscope
Adjustment Page	D
Adjustment Address	60
Specified Value	A = 0 ± 50mV

Note: Perform "8. Burst Cleaning Adjustment for PAL model" and "9. Color Adjustment for PAL model" alternately until each specified value is satisfied.

Adjusting method:

1) Select page: 0, address: 01, and set data: 01.
2) Select page: D, address: 60, change the data and set the flicker amplitude(A) of the cyan or green section to minimum.
3) Press the PAUSE button of the adjustment remote commander.
4) Select page: 0, address: 01, and set data: 00.
5) Perform "Color Adjustment for PAL model".

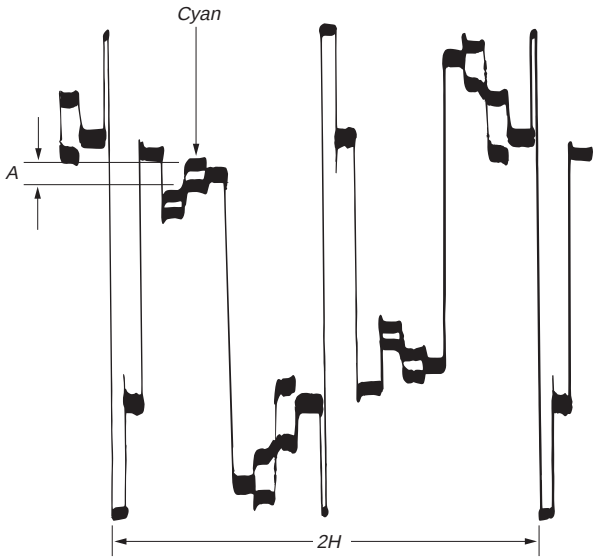

Fig. 5-3-31.

9. Color Adjustment for PAL model (CB-61 board)

Set the color saturation to the standard value. If deviated, the color will be to dark or light.

Mode	VTR stop
Signal	Color bar
Measurement Point	Pin ② of CN9925 (VG)
Measuring Instrument	Oscilloscope
Adjustment Page	D
Adjustment Address	6D
Specified Value	A = 0.54 ± 0.05V

Adjusting method:

1) Select page: 0, address: 01, and set data: 01.
2) Select page: D, address: 6D, change the data and set the voltage (A) between the yellow and green to the specified value.
3) Press the PAUSE button of the adjustment remote commander.
4) Select page: 0, address: 01, and set data: 00.
5) Check that the specified value of "Burst Cleaning Adjustment" is satisfied, if not perform "Burst Cleaning Adjustment".

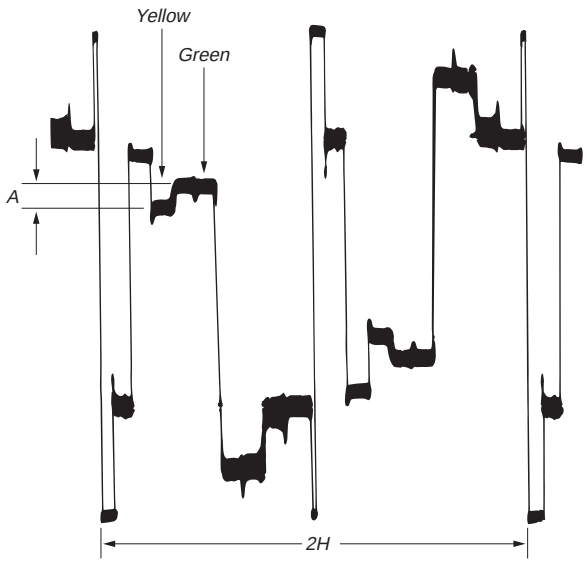

Fig. 5-3-32.

10. V-COM Adjustment (CB-61 board)

Set the DC bias of the common electrode drive signal of LCD to the specified value.
If deviated, the LCD display will move, producing flicker and conspicuous horizontal lines.

Mode	Playback pause
Signal	Alignment tape: For system operation check monoscope section (XH5-5 (NTSC)) (XH5-5P (PAL))
Measurement Point	Check on LCD display
Measuring Instrument	
Adjustment Page	D
Adjustment Address	65

Note1: Perform "Bright Adjustment" and "Contrast Adjustment" before this adjustment.

Adjusting method:

1) Select page: 0, address: 01, and set data: 01.
2) Select page: D, address: 65, change the data so that the horizontal lines of the gray sections are not conspicuous.
3) Press the PAUSE button of the adjustment remote commander.
4) Select page: 0, address: 01, and set data: 00.

11. White Balance Adjustment (CB-61 board)

Correct the white balance.
If deviated, the LCD screen color cannot be reproduced.

Mode	VTR stop
Signal	10-step stair-step signal or color bar signal whose chroma and burst signals are turned off
Measurement Point	Check on LCD display
Measuring Instrument	
Adjustment Page	D
Adjustment Address	61, 62
Specified Value	The LCD screen should not be colored.

Note1: Check the white balance only when replacing the following parts. If necessary, adjust them.
1. LCD panel
2. Light induction plate
3. IC801

Adjusting method:

1) Select page: 0, address: 01, and set data: 01.
2) Select page: D, address: 61 and 62, and set the data to the initial value.
   Note: To write in the non-volatile memory (EEPROM), press the PAUSE button of the adjustment remote commander each time to set the data.

Address	61	62
Data	70	6F

3) Check that the LCD screen is not colored. If colored, change the data of page: D, address: 61 and 62 so that the LCD screen is not colored.
   Note: To write in the non-volatile memory (EEPROM), press the PAUSE button of the adjustment remote commander each time to set the data.
4) Select page: 0, address: 01, and set data: 00.

5-4. SERVICE MODE

4-1. ADJUSTMENT REMOTE COMMANDER

The adjustment remote commander is used for changing the calculation coefficient in signal processing, EVR data, etc. The adjustment remote commander performs bi-directional communication with the unit using the remote commander signal line (LANC). The resultant data of this bi-directional communication is written in the non-volatile memory.

1. Using the adjustment remote commander

1) Connect the adjustment remote commander to the LANC terminal.
2) Set the HOLD switch of the adjustment remote commander to "HOLD" (SERVICE position). If it has been properly connected, the LCD on the adjustment remote commander will display as shown in Fig. 5-4-1.

Fig. 5-4-1.

3) Operate the adjustment remote commander as follows.
   - Changing the page
     The page increases when the EDIT SEARCH+ button is pressed, and decreases when the EDIT SEARCH– button is pressed. There are altogether 16 pages, from 0 to F.

Hexadecimal notation	0 1 2 3 4 5 6 7 8 9 A B C D E F
LCD Display	0 1 2 3 4 5 6 7 8 9 A b c d E F
Decimal notation conversion value	0 1 2 3 4 5 6 7 8 9 10 11 12 13 14 15

   - Changing the address
     The address increases when the FF (►►) button is pressed, and decreases when the REW (◄◄) button is pressed. There are altogether 256 addresses, from 00 to FF.
   - Changing the data (Data setting)
     The data increases when the PLAY (►) button is pressed, and decreases when the STOP (■) button is pressed. There are altogether 256 data, from 00 to FF.
   - Writing the adjustment data
     The PAUSE button must be pressed to write the adjustment data (C, D page) in the nonvolatile memory. (The new adjusting data will not be recorded in the nonvolatile memory if this step is not performed.)
4) After completing all adjustments, turn off the main power supply (8.4V) once.

2. Precautions upon using the adjustment remote commander

Mishandling of the adjustment remote commander may erase the correct adjustment data at times. To prevent this, it is recommended that all adjustment data be noted down before beginning adjustments and new adjustment data after each adjustment.

4-2. DATA PROCESS

The calculation of the DDS display and the adjustment remote commander display data (hexadecimal notation) are required for obtaining the adjustment data of some adjustment items. In this case, after converting the hexadecimal notation to decimal notation, calculate and convert the result to hexadecimal notation, and use it as the adjustment data. Indicates the hexadecimal-decimal conversion table.

Hexadecimal-decimal Conversion Table

Upper digit of hexadecimal \ Lower digit of hexadecimal	0	1	2	3	4	5	6	7	8	9	A (R)	B (b)	C (c)	D (d)	E (E)	F (F)
0	0	1	2	3	4	5	6	7	8	9	10	11	12	13	14	15
1	16	17	18	19	20	21	22	23	24	25	26	27	28	29	30	31
2	32	33	34	35	36	37	38	39	40	41	42	43	44	45	46	47
3	48	49	50	51	52	53	54	55	56	57	58	59	60	61	62	63
4	64	65	66	67	68	69	70	71	72	73	74	77	76	77	78	79
5	80	81	82	83	84	85	86	87	88	89	90	91	92	93	94	95
6	96	97	98	99	100	101	102	103	104	105	106	107	108	109	110	111
7	112	113	114	115	116	117	118	119	120	121	122	123	124	125	126	127
8	128	129	130	131	132	133	134	135	136	137	138	139	140	141	142	143
9	144	145	146	147	148	149	150	151	152	153	154	155	156	157	158	159
A (R)	160	161	162	163	164	165	166	167	168	169	170	171	172	173	174	175
① B (b)	176	177	178	179	180	181	182	183	184	185	186	187	188	189	190	191
C (c)	192	193	194	195	196	197	198	199	200	201	202	203	204	205	206	207
D (d)	208	209	210	211	212	213	214	215	216	217	218	219	220	221	222	223
E (E)	224	225	226	227	228	229	230	231	232	233	234	235	236	237	238	239
F (F)	240	241	242	243	244	245	246	247	248	249	250	251	252	253	254	255

② (column header)

Note: The characters shown in the parenthesis ( ) shown the display on the adjustment remote commander.

(Example) If the DDS display or the adjustment remote commander shows BD (bd);
Because the upper digit of the adjustment number is B (b), and the lower digit is D (d), the meeting point "189" of ① and ② in the above table is the corresponding decimal number.

Table. 5-4-2.

4-3. SERVICE MODE

1. Setting the Test Mode

Page D	Address 10

Data	Function
00	Normal
02	Forced VTR power ON

- Before setting the data , select page: 0, address: 01, and set data: 01.
- For page D, the data set is recorded in the non-volatile memory by pressing the PAUSE button of the adjustment remote commander. In this case, take note that the test mode will not be exited even when the main power is turned off (8.4Vdc).
- After completing adjustments/repairs, be sure to return the data of this address to 00, and press the PAUSE button of the adjustment remote commander.
  Select page: 0, address: 01, and set data: 00.

2. Emergence Memory Address

Page C	Address 30 to 3B

Address	Contents
30	EMG code when first error occurs
32	Upper: MSW code when shift starts when first error occurs Lower: MSW code when first error occurs
33	Lower: MSW code to be moved when first error occurs
34	EMG code when second error occurs
36	Upper: MSW code when shift starts when second error occurs Lower: MSW code when second error occurs
37	Lower: MSW code to be moved when second error occurs
38	EMG code when last error occurs
3A	Upper: MSW code when shift starts when last error occurs Lower: MSW code when last error occurs
3B	Lower: MSW code to be moved when last error occurs

When no error occurs in this unit, data “00” is written in the above addresses (30 to 3B). when first error occurs in the unit, the data corresponding to the error is written in the first emergency address (30 to 33). In the same way, when the second error occurs, the data corresponding to the error is written in the second emergency address (34 to 37). Finally, when the last error occurs, the data corresponding to the error is written in the last emergency address (38 to 3B).

Note: After completing adjustments, be sure to initialize the data of addresses 30 to 3B to “00”.

Initializing method:

1) Select page: 0, address: 01, and set data: 01.
2) Select page: 3, address: 01, set data: FD, and press the PAUSE button.
3) Select page: 0, address: 01, and set data: 00.

2-1. EMG Code (Emergency Code)

Codes corresponding to the errors which occur are written in addresses 30, 34 and 38. The type of error indicated by the code are shown in the following table.

Code	Emergency Type
00	No error
10	Loading motor emergency during loading
11	Loading motor emergency during unloading
22	T reel emergency during normal rotation
23	S reel emergency during normal rotation
24	T reel emergency (Short circuit between S reel terminal and T reel terminal)
30	FG emergency at the start up of the capstan
40	FG emergency at the start up of the drum
42	FG emergency during normal rotation of the drum

2-2. MSW Code

MSW when errors occur:
Information on MSW (mode SW) when errors occur

MSW when movement starts:
Information on MSW when movements starts when the mechanism position is moved (When the L motor is moved)

MSW of target of movement:
Information on target MSW of movement when the mechanism position is moved

Mechanical Position

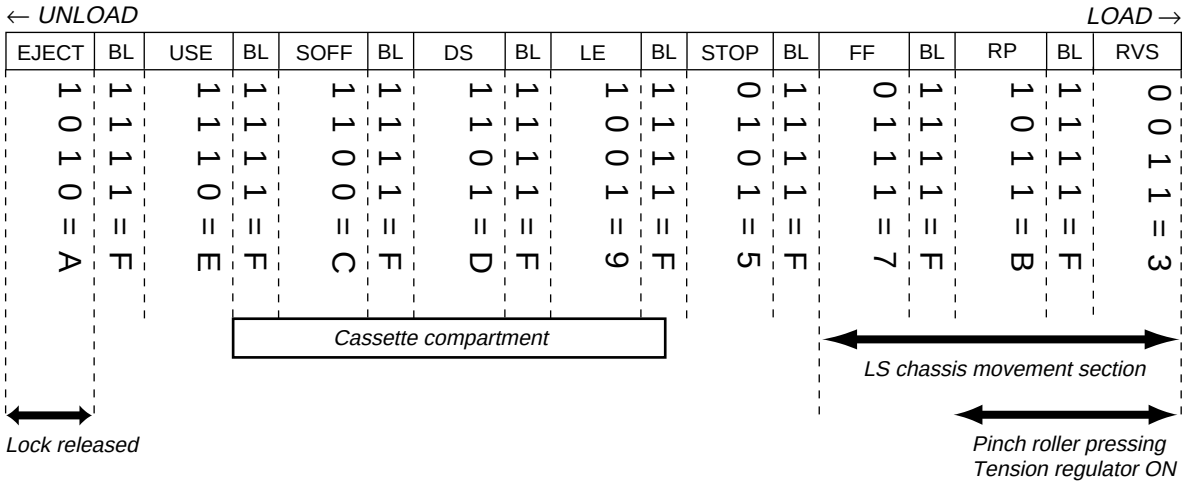

Position	Code	Contents
EJECT	A	Position at which the cassette component lock is released, and position at the farthest unload side mechanically at which the mechanism can move no further in the UNLOAD direction.
BL	F	BLANK code, at the boundary between codes. The mechanism will not stop at this code during operations. (Excluding LOAD/UNLOAD)
USE	E	EJECT completion position. When the cassette is ejected, the mechanism will stop at this position. Cassette IN standby. The guide will start protruding out as the mechanism moves towards the LOAD position.
SOFF	C	Code during loading. Code output while the LS chassis is moving.
DS	D	LS operations and guide loading are performed here.
LE	9	Current limiter is turned off.
STOP	5	Stop position in the loading state. The pinch roller separates, the tension regulator returns, and the brake is imposed on both reels.
FF	7	FF position. The tension regurator is half on. This position is not used except for the FF mode.
RP	B	PB, REC, CUE, PAUSE, FX2, FWD-SL positions. When the pinch roller is pressed, and the tension regulator is ON, the mechanism is operating at this position in modes in which normal images are shown.
RVS	3	Reverse running position. REW, REV, RX1, RX2, and RVS-SLOW are performed at this position.
NULL	0	Code not exsisting in the MD. When errors occur when the loading motor is not driving, this code is memorized.

3. Bit value discrimination

Bit values must be discriminated using the display data of the adjustment remote commander for following items. Use the table below to discriminate if the bit value is “1” or “0”.

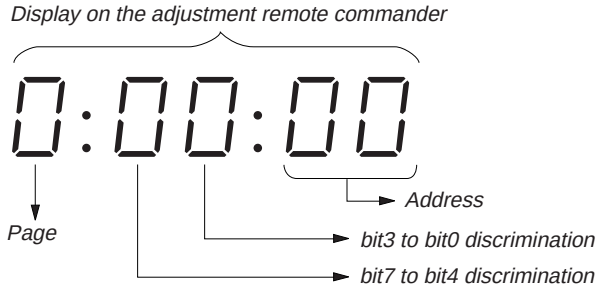

	Display on the adjustment remote commander	Bit values			
		bit3 or bit7	bit2 or bit6	bit1 or bit5	bit0 or bit4
	0	0	0	0	0
	1	0	0	0	1
	2	0	0	1	0
	3	0	0	1	1
	4	0	1	0	0
	5	0	1	0	1
	6	0	1	1	0
	7	0	1	1	1
Ⓐ	8	1	0	0	0
	9	1	0	0	1
	A (A)	1	0	1	0
	B (b)	1	0	1	1
	C (c)	1	1	0	0
	D (d)	1	1	0	1
Ⓑ	E (E)	1	1	1	0
	F (F)	1	1	1	1

Example: If “8E” is displayed on the adjustment remote commander, the bit values for bit7 to bit4 are shown in the Ⓐ column, and the bit values for bit3 to bit0 are shown in the Ⓑ column.

4. Switch check (1)

Page 2	Address 43

Bit	Function	When bit value=1	When bit value=0
0	VTR MODE SW	OFF	ON
1			
2			
3	EJECT SW	OFF	ON
4	CC DOWN SW	OFF	ON
5			
6			
7			

Using method:

1) Select page: 2, address: 43.
2) By discriminating the bit value of display data, the state of the switches can be discriminated.

5. Switch check (2)

Page 2	Address 5C to 62

Using method:

1) Select page:2, address: 5C to 62.
2) By discriminating the display data, the pressed key can be discriminated.

Address	Data					
	00 to 18	19 to 46	47 to 74	75 to A4	A5 to D4	D5 to FF
5C (AD0) (IC2302 ⑧⑨)	STOP (FK-71 board S001)	PLAY (FK-71 board S002)	REC (FK-71 board S003,004)	FF (FK-71 board S005)	REW (FK-71 board S006)	No key input
5D (AD1) (IC2302 ⑨⓪)	PAUSE (FK-71 board S007)	SLOW (FK-71 board S008)				No key input
5E (AD2) (IC2302 ⑨①)	DISPLAY (FK-71 board S009)	TITLE (FK-71 board S010)		AUDIO DUB (FK-71 board S012)	ASSEMBLE (FK-71 board S013)	No key input
5F (AD3) (IC2302 ⑨②)	MENU (IO-62 board S102)	EXECUTE (IO-62 board S107)				No key input
61 (AD5) (IC2302 ⑨④)	PANEL CLOSE (IR-29 board S361)					PANEL OPEN (IR-29 board S104)
62 (AD6) (IC2302 ⑨⑤)	LASER LINK (IO-62 board S101)	LCD BRIGHT + (IO-62 board S103)	LCD BRIGHT – (IO-62 board S104)	VOLUME + (IO-62 board S105)	VOLUME – (IO-62 board S106)	No key input

6. Record of Use check

Page 2	Address 35 to 3D

Address	Function		Remarks
35	Drum rotation	Minute	
36	counted time	Hour (L)	10th place digit and 1st place digit of counted time (decimal digit)
37	(BCD code)	Hour (H)	1000th place digit and 100th place digit of counted time (decimal digit)
38	User initial power	Year	After setting the clock, set the date of power on next
39	on date	Month	
3A	(BCD code)	Day	
3B	Final condensation	Year	
3C	occurrence data	Month	
3D	(BCD code)	Day	

Using method:

1) The record of use data is displayed at page: 2, addresses: 35 to 3D.
   Note: This data will be erased when the coin lithium battery (FP-571 board BT001) is removed (reset).

SECTION 6
REPAIR PARTS LIST

6-1. EXPLODED VIEWS

NOTE:

- -XX, -X mean standardized parts, so they may have some differences from the original one.
- Items marked "*" are not stocked since they are seldom required for routine service. Some delay should be anticipated when ordering these items.
- The mechanical parts with no reference number in the exploded views are not supplied.

6-1-1. CABINET ASSEMBLY

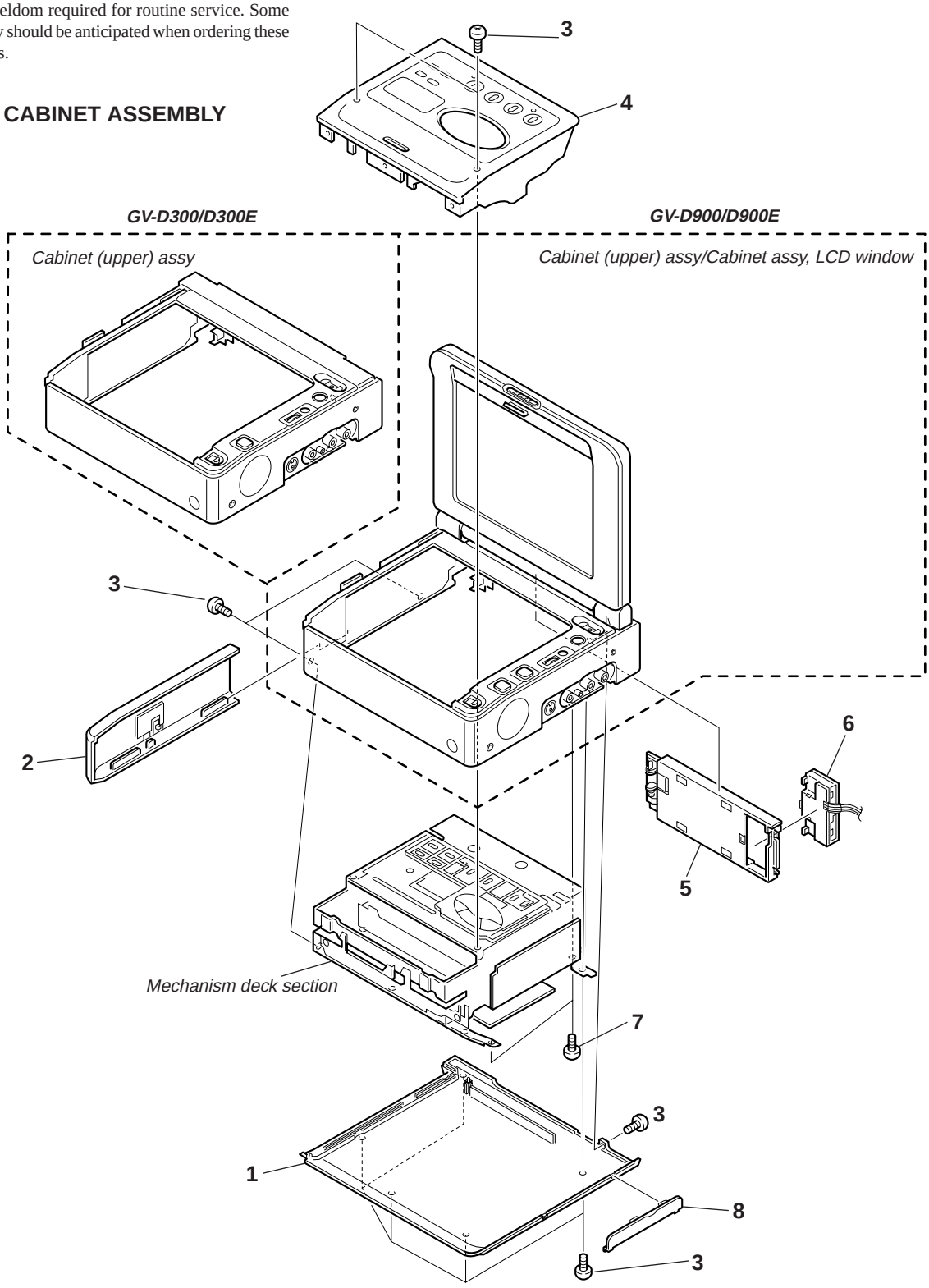

Ref. No.	Part No.	Description	Remarks
1	X-3948-788-1	CABINET (BOTTOM) ASSY	
2	X-3947-873-1	CABINET (LID) ASSY	
3	3-968-729-01	SCREW (M2), LOCK ACE, P2	
4	X-3948-547-1	LID ASSY, CASSETTE (D300E)	
4	X-3948-342-1	LID ASSY, CASSETTE (D300)	
4	X-3948-339-1	LID ASSY, CASSETTE (D900/D900E)	

Ref. No.	Part No.	Description	Remarks
5	X-3947-753-2	PANEL ASSY, BATTERY	
6	1-694-076-11	TERMINAL BOARD, BATTERY	
7	3-948-339-61	TAPPING	
8	3-978-675-41	LID, JACK (D300/D900)	
8	3-978-675-51	LID, JACK (D300E/D900E)	

6-1-2. LCD WINDOW CABINET, CABINET (UPPER) ASSEMBLY

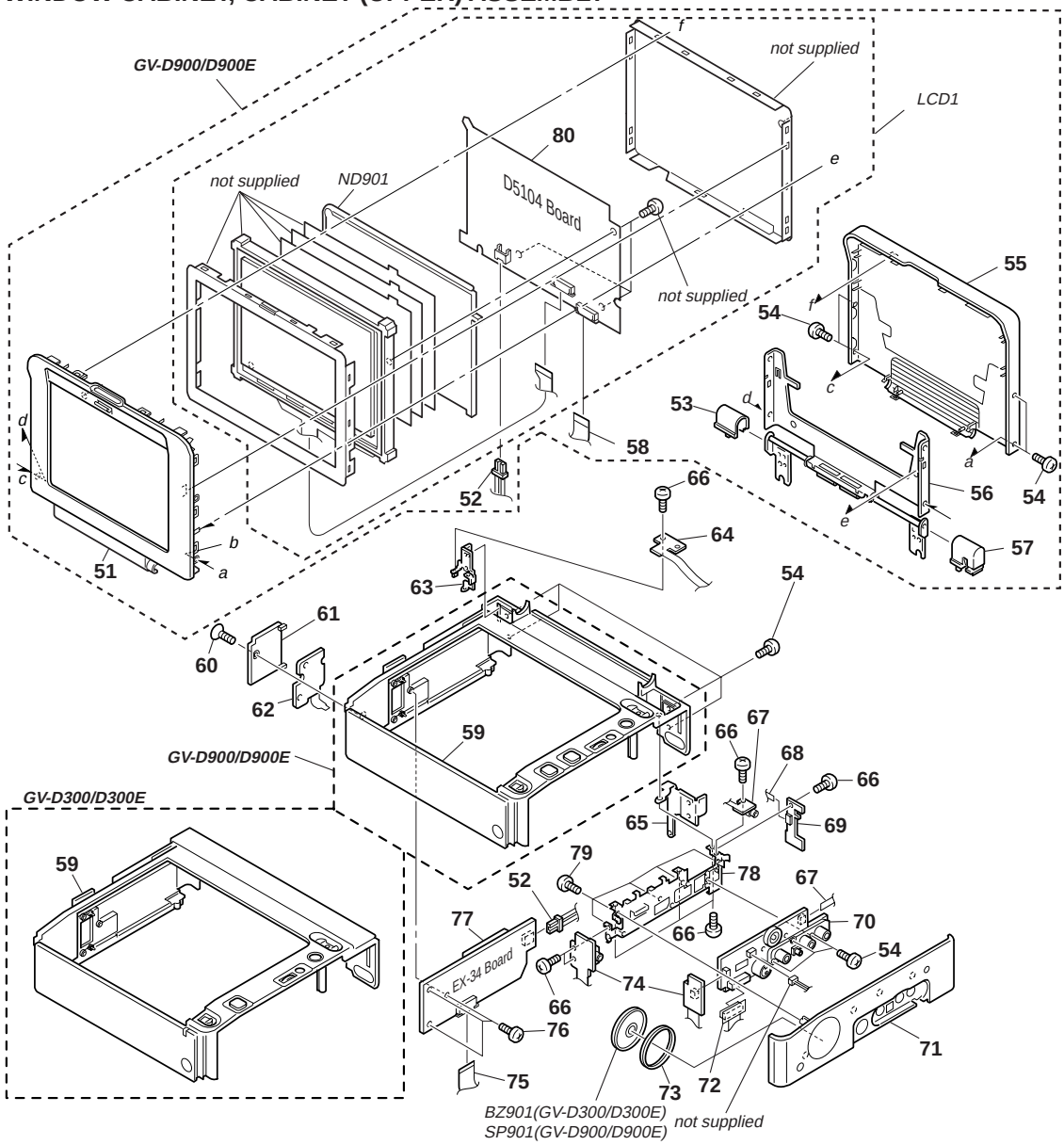

Ref. No.	Part No.	Description	Remarks
51	X-3947-752-1	CABINET ASSY, LCD WINDOW (D900/D900E)	
52	1-958-004-11	HARNESS (EP-51) (D900/D900E)	
53	3-978-718-01	COVER (L), SHAFT (D900/D900E)	
54	3-968-729-01	SCREW (M2), LOCK ACE, P2	
55	3-978-717-41	CABINET, LCD (D900)	
55	3-978-717-61	CABINET, LCD (D900E)	
56	3-978-709-01	HINGE UNIT (D900/D900E)	
57	3-978-719-01	COVER (R), SHAFT (D900/D900E)	
58	1-667-398-11	FP-569 FLEXIBLE BOARD (D900/D900E)	
59	X-3948-343-1	CABINET (UPPER) ASSY (D300/D300E)	
59	X-3948-338-1	CABINET (UPPER) ASSY (D900/D900E)	
60	7-685-203-19	SCREW +KTP 2X5 TYPE2 NON-SLIT	
61	3-978-710-01	LID, LITHIUM	
62	1-667-400-11	FP-571 FLEXIBLE BOARD	
* 63	3-978-678-01	SHEET METAL (L), STRAP	
64	1-669-797-11	FP-602 FLEXIBLE BOARD	
* 65	3-978-677-01	SHEET METAL (R), STRAP	
66	3-968-729-51	SCREW (M2), LOCK ACE, P2	
67	1-667-404-11	FP-575 FLEXIBLE BOARD	
68	1-667-401-11	FP-572 FLEXIBLE BOARD	
69	A-7073-555-A	IR-29 BOARD, COMPLETE (D900/D900E)	

Ref. No.	Part No.	Description	Remarks
69	A-7073-581-A	IR-29 BOARD, COMPLETE (D300/D300E)	
70	A-7073-622-A	IO-62 BOARD, COMPLETE (D900E)	
70	A-7073-580-A	IO-62 BOARD, COMPLETE (D300)	
70	A-7073-554-A	IO-62 BOARD, COMPLETE (D900)	
70	A-7073-623-A	IO-62 BOARD, COMPLETE (D300E)	
71	X-3947-783-1	CABINET (R) ASSY (D300/D300E)	
71	X-3947-754-1	CABINET (R) ASSY (D900/D900E)	
72	1-669-793-11	FP-598 FLEXIBLE BOARD	
73	3-965-367-01	SPACER, SP (D900/D900E)	
74	1-667-403-31	FP-574 FLEXIBLE BOARD	
75	1-667-399-11	FP-570 FLEXIBLE BOARD	
76	3-948-339-61	TAPPING	
77	A-7073-553-A	EX-34 BOARD, COMPLETE (D900/D900E)	
77	A-7073-579-A	EX-34 BOARD, COMPLETE (D300/D300E)	
* 78	X-3947-865-1	FRAME ASSY, JACK	
79	3-945-884-11	SCREW (2X6)	
80	1-761-030-11	D5104 BOARD, MOUNT (D900/D900E)	
BZ901	1-529-107-11	BUZZER, PIEZOELECTRIC (D300/D300E)	
LCD1	1-801-904-24	MODULE, CRYSTAL INDICATION (D900/D900E)	
⚠ ND901	1-517-719-11	TUBE, FLUORESCENT, COLD CATHODE	
SP901	1-504-753-21	SPEAKER (2.8CM) (D900/D900E)	

Note :
The components identified by mark ⚠ or dotted line with mark ⚠ are critical for safety.
Replace only with part number specified.

Note :
Les composants identifiés par une marque ⚠ sont critiques pour la sécurité.
Ne les remplacer que par une pièce portant le numéro spécifié.

6-1-3. MECHANISM DECK ASSEMBLY

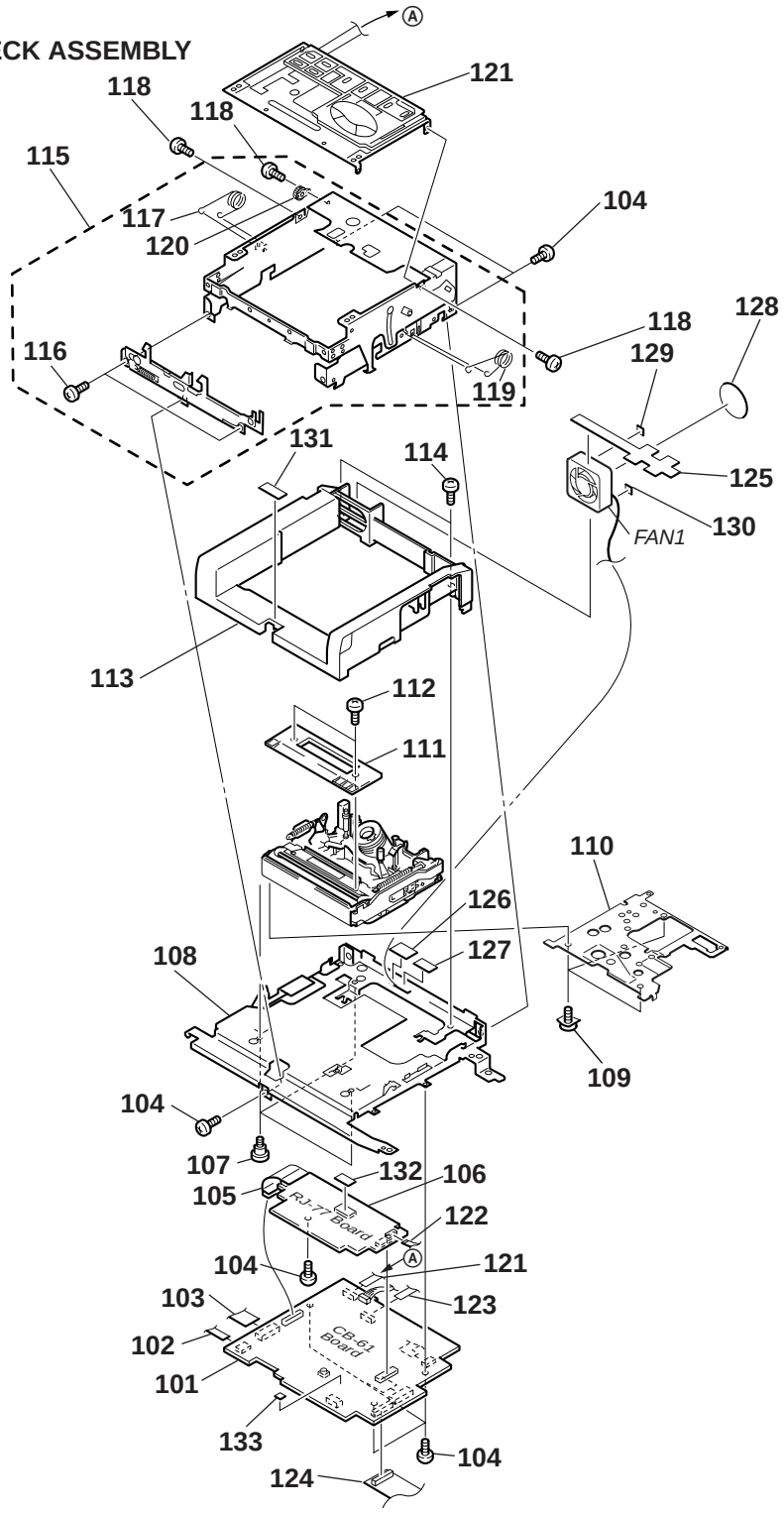

Ref. No.	Part No.	Description	Remarks
101	A-7073-601-A	CB-61 BOARD, COMPLETE (D900)	
101	A-7073-606-A	CB-61 BOARD, COMPLETE (D300E)	
101	A-7073-605-A	CB-61 BOARD, COMPLETE (D300)	
101	A-7073-602-A	CB-61 BOARD, COMPLETE (D900E)	
102	1-667-400-11	FP-571 FLEXIBLE BOARD	
103	1-667-399-11	FP-570 FLEXIBLE BOARD	
104	3-968-729-51	SCREW (M2), LOCK ACE, P2	
105	1-669-794-11	FP-599 FLEXIBLE BOARD	
106	A-7073-552-A	RJ-77 BOARD, COMPLETE (D300/D900)	
106	A-7073-621-A	RJ-77 BOARD, COMPLETE (D300E/D900E)	
107	3-352-483-01	SCREW (M2), STEP	
108	X-3948-536-1	FRAME ASSY, RJ	
109	X-3945-526-1	SCREW ASSY, STEP	
* 110	3-977-586-11	FRAME, MD	
111	3-987-895-01	LID (D), LOADING	
112	3-719-695-21	SCREW (M1.7X3.5), SPECIAL HEAD	
113	3-987-891-01	COVER (D), BLIND	
114	3-968-729-01	SCREW (M2), LOCK ACE, P2	
* 115	X-3948-622-1	FRAME ASSY, LID	

Ref. No.	Part No.	Description	Remarks
116	3-968-729-21	SCREW (M2), LOCK ACE, P2	
117	3-978-702-01	SPRING (L), FRAME RETURN	
118	3-703-816-33	SCREW (M1.4X1.6), SPECIAL HEAD	
119	3-978-713-01	SPRING (R), FRAME RETURN	
120	3-965-303-01	DAMPER	
121	1-475-383-61	SWITCH BLOCK, CONTROL (FK-71)	
122	1-665-526-11	FP-538 FLEXIBLE BOARD	
123	1-669-797-11	FP-602 FLEXIBLE BOARD	
124	1-667-398-11	FP-569 FLEXIBLE BOARD (D900/D900E)	
125	3-050-431-02	SHEET (A), FAN	
126	3-051-128-01	SHEET (B), BA (12X8)	
127	3-051-130-01	SHEET (C), FAN (10X5)	
128	3-051-372-01	SHEET, BLIND FAN	
129	3-051-373-01	SORUBO (FRONT L)(4X4X2)	
130	3-051-374-01	SORUBO (FRONT R)(4X4X3)	
131	3-051-129-01	SHEET, BLIND (18X10)	
* 132	3-051-673-01	SHEET, SILICON (15X15X1)	
* 133	3-051-645-01	SPACER, EJECT	
FAN1	1-763-122-11	FAN, DC	

6-1-4. CASSETTE COMPARTMENT AND DRUM ASSEMBLY

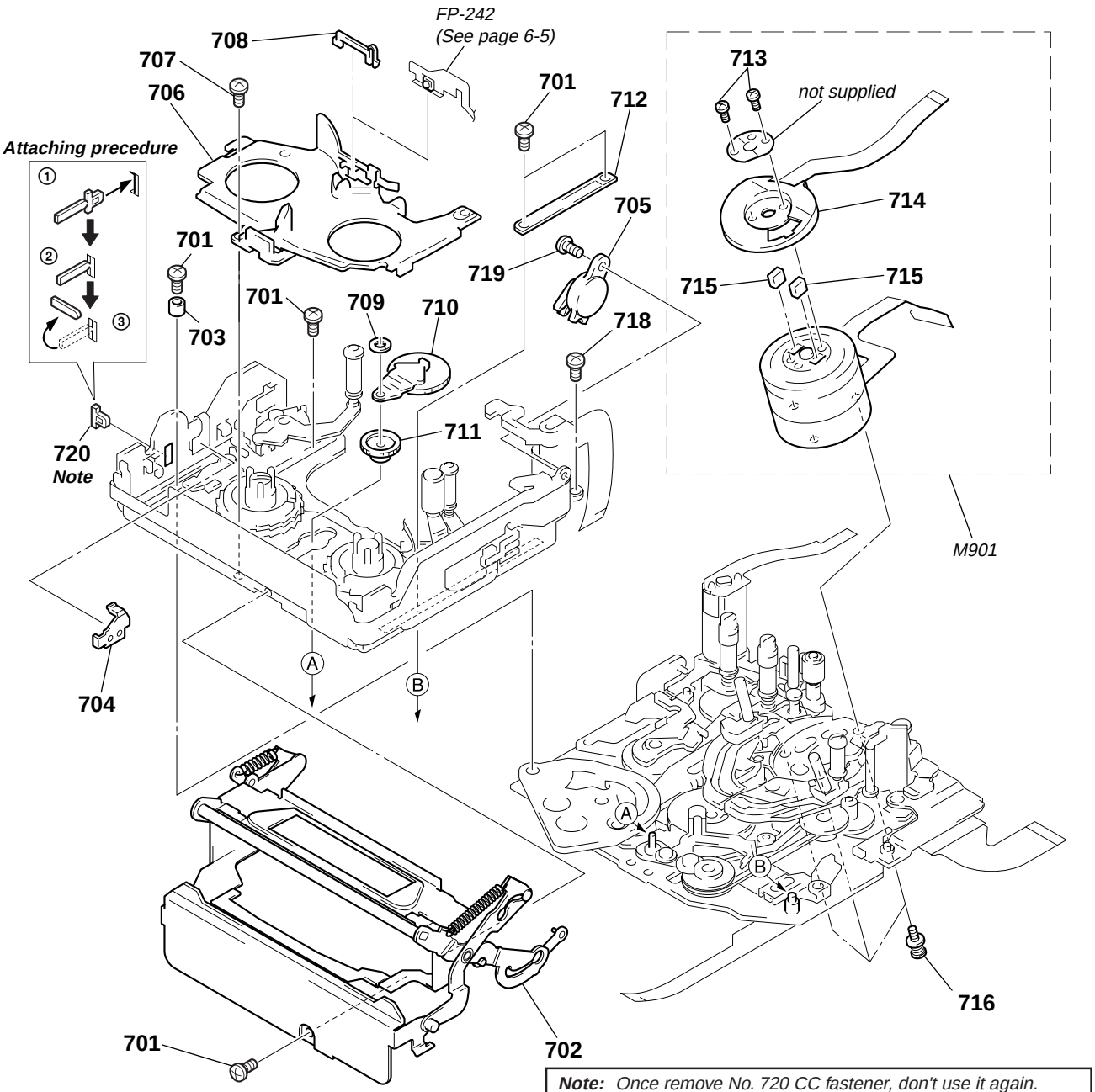

Note: *Once remove No. 720 CC fastener, don't use it again. Be sure to replace it with new one. (Attaching procedure is as shown above figure.)*

Ref. No.	Part No.	Description	Remarks
701	3-728-103-11	SCREW (M1.4X1.6)	
702	X-3947-480-1	CASSETTE COMPARTMENT ASSY	
703	3-748-703-01	COLLAR	
* 704	3-976-449-02	COVER, CC SWITCH	
705	3-976-446-01	DAMPER	
706	X-3748-613-3	BASE ASSY, LED	
707	3-704-197-21	SCREW (M1.4X2.5), LOCKING	
708	3-748-683-01	HOLDER, LED	
709	3-315-414-31	WASHER	
710	X-3748-609-2	GOOSENECK ASSY	

Ref. No.	Part No.	Description	Remarks
711	3-748-736-01	GEAR, RELAY	
712	3-748-702-02	SLIDER, CAM	
713	3-703-816-74	SCREW (M1.4X4.5), SPECIAL HEAD	
714	X-3944-897-2	MOTOR FPC ASSY	
715	1-770-363-11	ELASTIC CONNECTOR	
716	A-7026-009-B	SCREW ASSY, DRUM FITTING	
718	3-703-816-42	SCREW (M1.4X2.5), SPECIAL HEAD	
719	3-962-346-01	SCREW (M1.6)	
* 720	3-979-009-03	FASTENER, CC	
M901	A-7048-874-A	DRUM ASSY (DEH-11A-R)	

6-1-5. LS CHASSIS BLOCK SECTION

Note 1: About FP-242 and FP-584

The FP-242 and FP-584 flexible boards are installed to a chassis with a hot press, which are included in the Ref. No. 762 chassis (D2) assy, LS block section, They are not supplied separately because the high precision for installation is needed.

Note 2: Selecting the T washer

Select proper parts for the Ref. No. 768 T washer according to “Height adjustment for T reel table assembly” on page 23 in the “DV MECHANICAL ADJUSTMENT MANUAL Ⅰ “ (9-973-815-11).

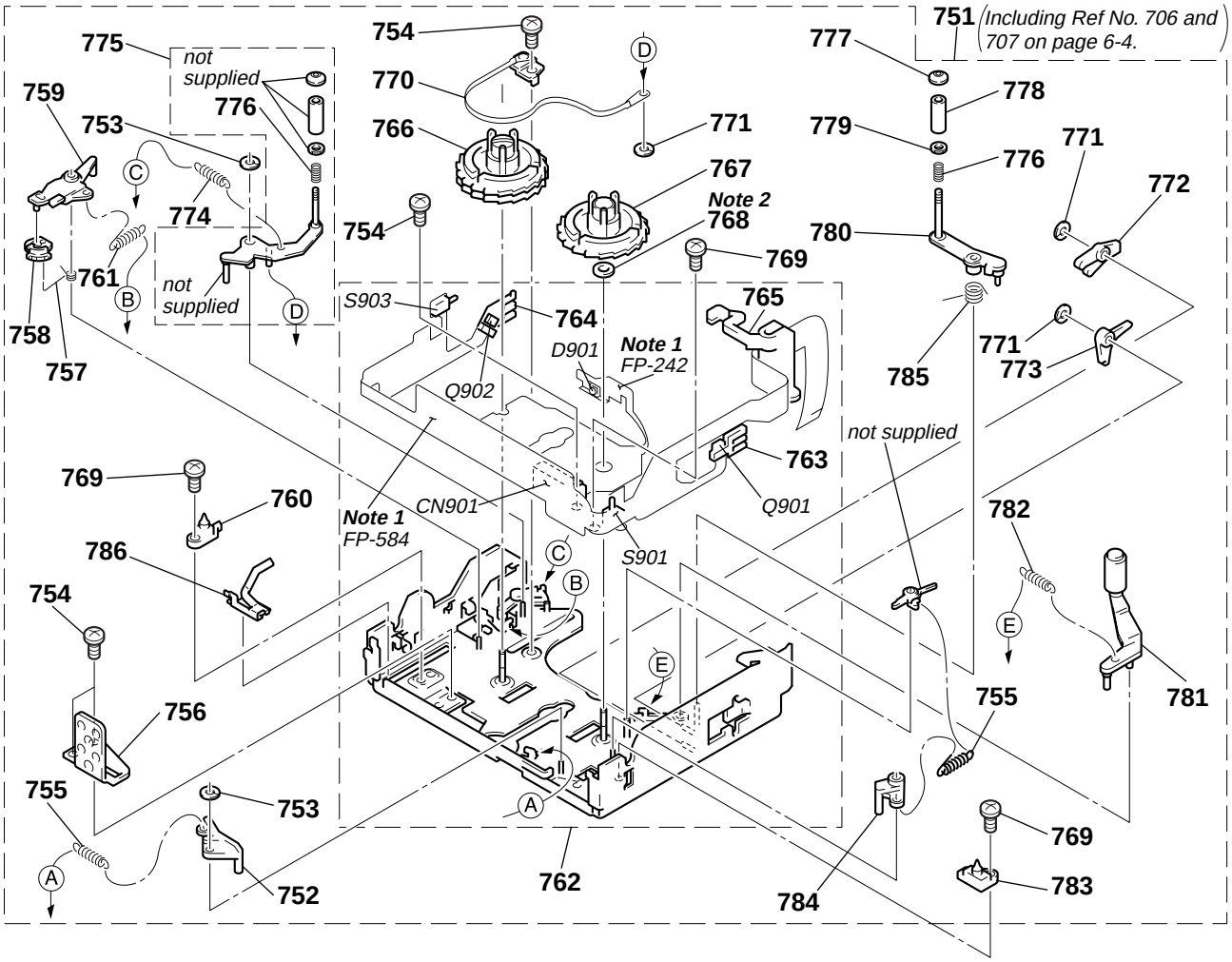

Ref. No.	Part No.	Description	Remarks
751	A-7026-030-A	CHASSIS(D2)BLOCK ASSY, LS(FOR SERVICE)	
752	3-748-775-03	BRAKE, RVS	
753	3-315-414-31	WASHER	
754	3-728-103-11	SCREW (M1.4X1.6)	
755	3-748-776-01	SPRING, TENSION	
756	3-748-681-01	PLATE, LS CAM	
757	3-748-774-01	SPRING, TORSION	
758	3-748-773-04	HARD, S	
759	3-748-815-02	ARM, S BRAKE	
760	3-748-677-01	POSITIONING, S	
761	3-968-656-01	SPRING, TENSION	
762	A-7026-025-A	CHASSIS (D2) ASSY, LS	
763	3-976-458-01	HOLDER (T), SENSOR	
764	3-976-644-01	SENSOR, HOLDER, S	
765	3-976-824-01	HOLDER, FPC	
766	X-3748-614-2	TABLE ASSY, REEL, S	
767	X-3748-615-2	TABLE ASSY, REEL, T	
768	3-748-682-11	WASHER, T (t: 0.1, YEL) Note 2	
768	3-748-682-21	WASHER, T (t: 0.35, BLK) Note 2	
768	3-748-682-01	WASHER, T (t: 0.25, GRN) Note 2	
769	3-703-816-42	SCREW (M1.4X2.5), SPECIAL HEAD	
770	X-3748-618-2	BAND ASSY, TENSION REGULATOR	

Ref. No.	Part No.	Description	Remarks
771	3-315-384-11	WASHER, STOPPER	
772	3-748-680-01	FOLLOWER, SLIDER	
773	3-748-679-01	LEVER, LOCK	
774	3-748-822-02	SPRING, EXTENSION	
775	A-7026-020-B	ARM BLOCK ASSY,	
776	3-940-891-01	SPRING, COMPRESSION	
777	3-966-194-01	FLANGE, TG7 UPPER	
778	3-748-777-02	TG7	
779	3-964-614-01	FLANGE, TG7 LOWER	
780	X-3748-616-2	ARM ASSY, TG7	
781	X-3748-630-2	ARM ASSY, PINCH	
782	3-748-603-01	SPRING, TENSION	
783	3-748-678-01	POSITIONING, T	
784	3-748-778-02	BRAKE, T HARD	
785	3-748-675-01	SPRING, TORSION	
786	3-973-067-01	SPRING,CASSETTE COMPARTMENT UP	
CN901	1-770-312-11	CONNECTOR 4P	
D901	8-719-050-98	DIODE LN57.SO	
Q901	8-729-028-71	TRANSISTOR PN166.SO	
Q902	8-729-028-71	TRANSISTOR PN166.SO	
S901	1-762-351-11	SWITCH, PUSH (1 KEY) (REC PROOF)	
S903	1-572-467-21	SWITCH, PUSH (1 KEY) (CC DOWN)	

6-1-6. MECHANISM CHASSIS BLOCK SECTION-1

Note: Be sure to remember the installed position (one of two position), direction and thickness of the Ref. No. 820 (head spacer) when the M902 (capstan motor)is removed. Refer to "3-9. Capstan motor" on page 15 in the DV MECHANICAL ADJUSTMENT MANUAL Ⅰ (9-973-815-11) for details. The thickness of head spacer is normally 100 mm. If it is lost, two 50 mm head spacers will be needed. Be careful not to loose it.

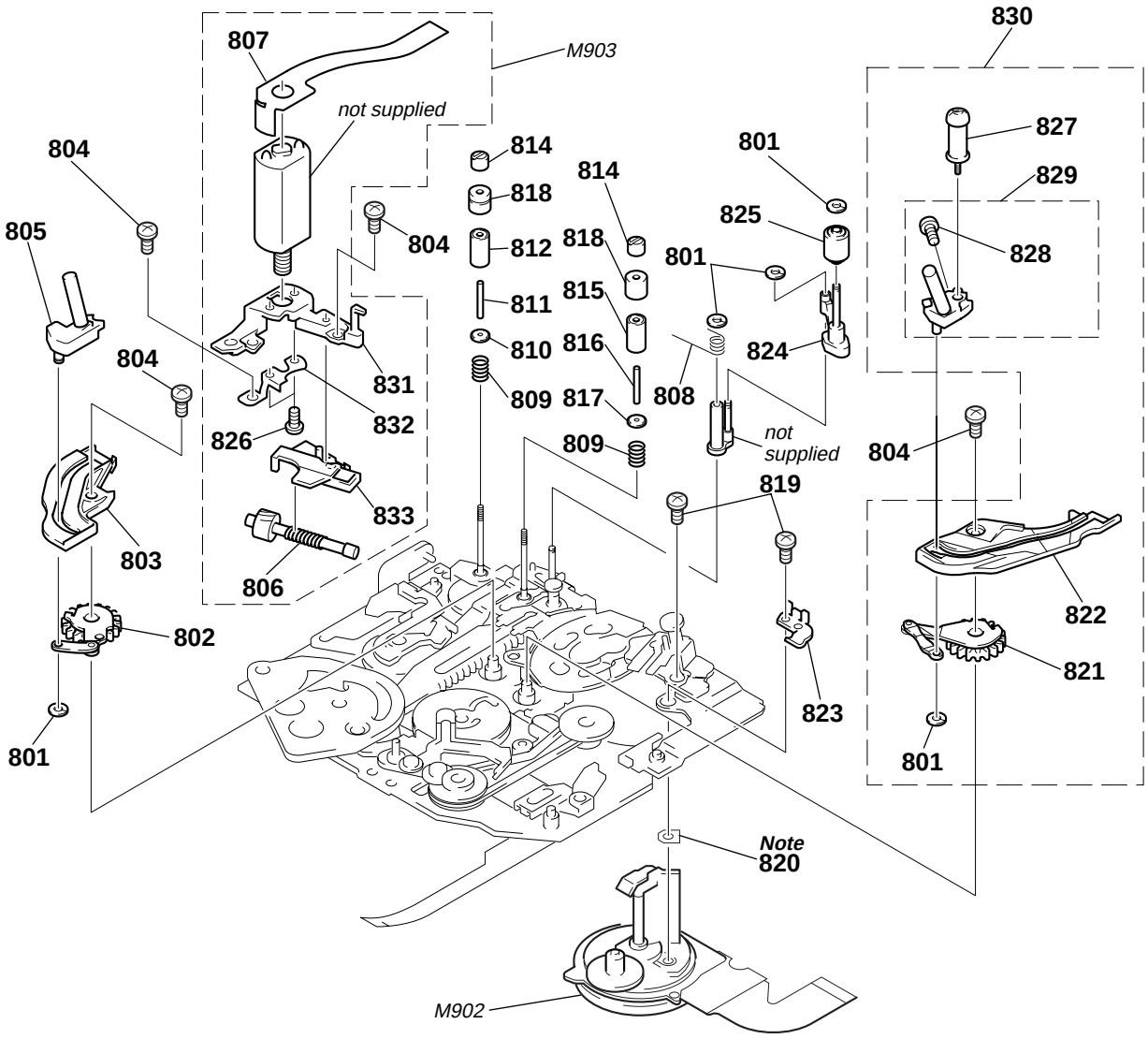

Ref. No.	Part No.	Description	Remarks
801	3-315-414-31	WASHER	
802	X-3748-623-1	GL (S) ASSY	
803	3-748-600-02	RAIL (S)	
804	3-703-816-71	SCREW (M1.4X3.0), SPECIAL HEAD	
805	X-3748-622-2	COASTER (S) ASSY	
806	X-3748-633-1	SHAFT ASSY, WORM	
807	1-666-102-11	FP-586 FLEXIBLE BOARD	
808	3-748-742-02	SPRING, TORSION	
809	3-966-107-01	SPRING, COMPRESSION	
810	3-966-105-01	FLANGE, TG1 LOWER	
811	3-050-519-01	SLEEVE, TG13	
811	3-966-099-01	ROLLER, TG13	
814	3-966-101-01	NUT, TG13	
815	3-966-099-11	ROLLER, TG13	
816	3-050-519-11	SLEEVE, TG13	
817	3-966-106-01	FLANGE, TG3 LOWER	
818	3-973-948-01	FLANGE (2), TG13 UPPER	
819	3-972-669-01	SCREW (M1.4X1.6)	

Ref. No.	Part No.	Description	Remarks
820	3-727-843-16	HEAD SPACER (FOR CORRECTION) t=50um	Note
821	X-3748-624-1	GL (T) ASSY	
822	3-748-601-02	RAIL (T)	
823	3-964-430-01	SPRING, LS RETAINER	
824	X-3748-628-2	SLIDE ASSY, HC	
825	A-7026-006-A	ROLLER ASSY, HC	
826	3-947-504-01	SCREW (M1.2X2), SPECIAL, 0	
827	X-3748-626-3	TG5 ASSY	
828	3-965-211-01	SCREW (M1)	
829	X-3948-052-1	COASTER (T) ASSY	
830	A-7026-002-A	GL (T) BLOCK ASSY	
* 831	3-976-463-01	HOLDER (DIA. 8), MOTOR	
* 832	3-964-429-01	COVER, WHEEL	
* 833	3-976-464-01	HOLDER (DIA. 8), SHAFT	
M902	8-835-524-01	MOTOR, DC SCD-0101A	
M903	A-7010-673-A	ASSY, LM MOTOR	

6-1-7. MECHANISM CHASSIS BLOCK SECTION-2

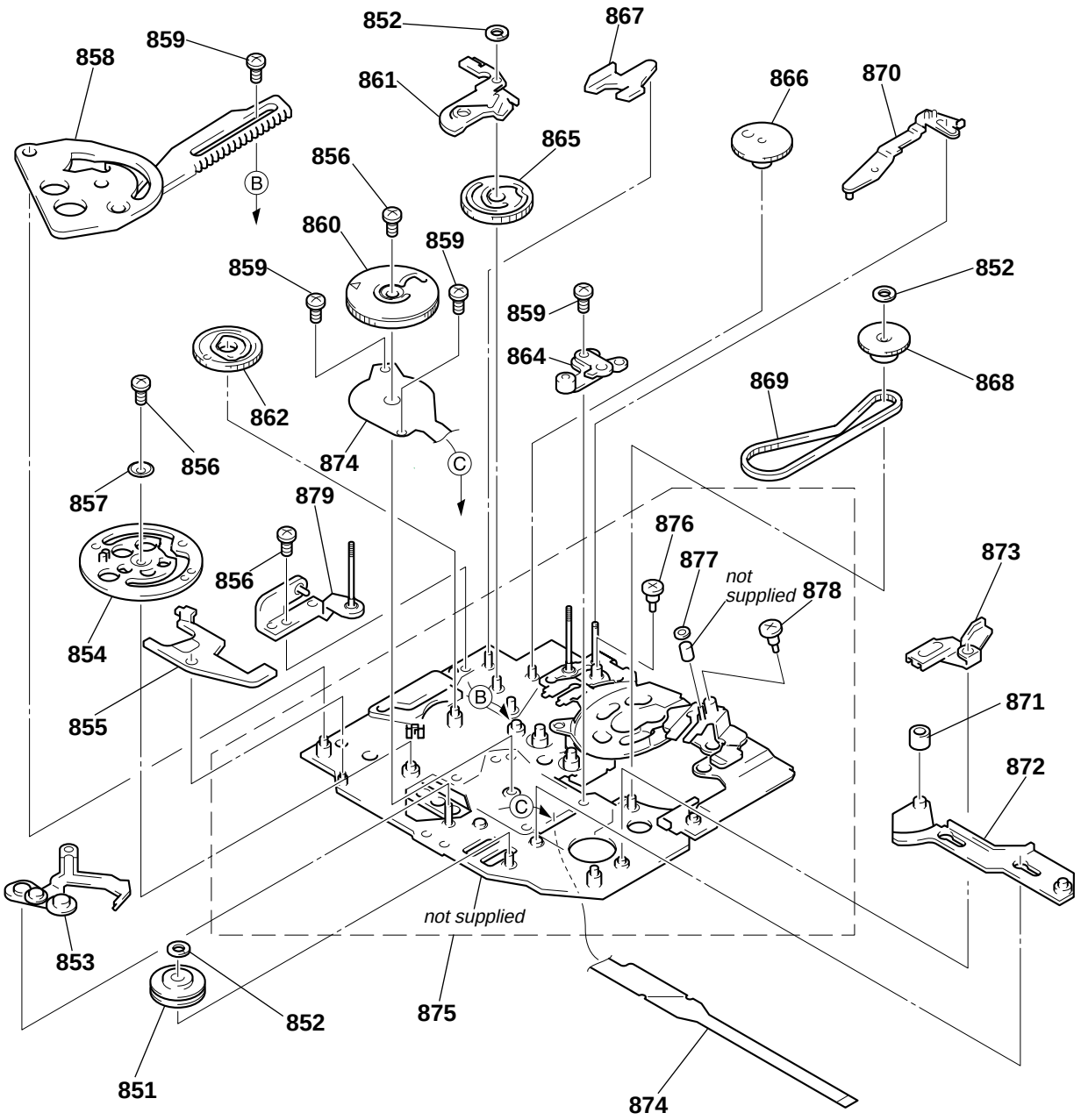

Ref. No.	Part No.	Description	Remarks
851	X-3945-640-1	PULLEY ASSY, RELAY	
852	3-315-414-31	WASHER	
853	X-3748-600-1	ARM ASSY, COMPULSION	
854	X-3748-605-1	CAM (S) ASSY	
855	3-976-452-01	LEVER, EJECT	
856	3-703-816-42	SCREW (M1.4X2.5), SPECIAL HEAD	
857	3-976-460-01	SPACER, CAM (S)	
858	X-3748-602-2	ARM ASSY, LS	
859	3-728-103-11	SCREW (M1.4X1.6)	
860	X-3748-604-1	CAM ASSY, MODE	
861	3-748-739-02	RETAINER, GEAR	
862	3-748-740-03	GEAR, NO.3	
864	X-3748-627-1	ARM ASSY, ADJUSTMENT	
865	3-748-738-02	GEAR, NO.2	

Ref. No.	Part No.	Description	Remarks
866	3-748-741-03	GEAR, NO.1	
867	3-748-731-02	ARM, POSITION	
868	X-3945-639-1	PULLEY ASSY, CONVERSION	
869	3-748-734-01	BELT, RELAY	
870	3-974-501-01	ARM (2), RVS STOPPER	
871	3-728-109-01	ROLLER, LS	
872	3-748-647-01	SLIDER, MODE	
873	3-748-733-01	ARM, PINCH RELEASE	
874	1-666-101-11	FP-585 FLEXIBLE BOARD	
875	A-7026-023-B	CHASSIS SUB BLOCK ASSY	
876	3-748-620-02	SCREW, ADJUSTMENT (S)	
877	4-943-288-01	WASHER	
878	3-748-605-02	SCREW, ADJUSTMENT	
879	X-3748-606-4	BASE ASSY, TG1	

CB-61

6-2. ELECTRICAL PARTS LIST

NOTE:

When indicating parts by reference number, please include the board name.

The components identified by mark ⚠ or dotted line with mark ⚠ are critical for safety. Replace only with part number specified.

Les composants identifiés par une marque ⚠ sont critiques pour la sécurité. Ne les remplacer que par une pièce portant le numéro spécifié.

- Due to standardization, replacements in the parts list may be different from the parts specified in the diagrams or the components used on the set.
- -XX, -X mean standardized parts, so they may have some difference from the original one.
- Items marked "*" are not stocked since they are seldom required for routine service. Some delay should be anticipated when ordering these items.
- CAPACITORS:
  uF: µF
- RESISTORS
  All resistors are in ohms.
  METAL: metal-film resistor
  METAL OXIDE: Metal Oxide-film resistor
  F: nonflammable
- COILS
  uH: µH
- SEMICONDUCTORS
  In each case, u: µ, for example:
  uA...: µA... , uPA... , µPA... ,
  uPB... , µPB... , uPC... , µPC... ,
  uPD..., µPD...

Ref. No.	Part No.	Description			Remarks
	A-7073-601-A	CB-61 BOARD, COMPLETE (D900) **********			
	A-7073-602-A	CB-61 BOARD, COMPLETE (D900E) **********			
	A-7073-605-A	CB-61 BOARD, COMPLETE (D300) **********			
	A-7073-606-A	CB-61 BOARD, COMPLETE (D300E) **********			
					(Ref.No.: 10,000 Series)
		< CAPACITOR >			
C802	1-107-823-11	CERAMIC CHIP	0.47uF	10% 16V	(D900/D900E)
C804	1-135-091-00	TANTALUM CHIP	1uF	20% 16V	(D900/D900E)
C805	1-162-970-11	CERAMIC CHIP	0.01uF	10% 25V	(D900/D900E)
C806	1-104-851-11	TANTAL. CHIP	10uF	20% 10V	(D900/D900E)
C807	1-107-826-11	CERAMIC CHIP	0.1uF	10% 16V	(D900/D900E)
C808	1-113-682-11	TANTAL. CHIP	33uF	20% 10V	(D900/D900E)
C809	1-113-682-11	TANTAL. CHIP	33uF	20% 10V	(D900/D900E)
C810	1-162-970-11	CERAMIC CHIP	0.01uF	10% 25V	(D900/D900E)
C811	1-162-969-11	CERAMIC CHIP	0.0068uF	10% 25V	(D900/D900E)
C812	1-104-912-11	TANTAL. CHIP	3.3uF	20% 6.3V	(D900/D900E)
C813	1-162-970-11	CERAMIC CHIP	0.01uF	10% 25V	(D900/D900E)
C814	1-164-156-11	CERAMIC CHIP	0.1uF	25V	(D900/D900E)
C815	1-107-687-11	TANTAL. CHIP	3.3uF	20% 20V	(D900/D900E)
C816	1-107-826-11	CERAMIC CHIP	0.1uF	10% 16V	(D900/D900E)
C817	1-107-826-11	CERAMIC CHIP	0.1uF	10% 16V	(D900/D900E)
C818	1-115-412-11	CERAMIC CHIP	680PF	5% 25V	(D900E)
C820	1-107-826-11	CERAMIC CHIP	0.1uF	10% 16V	(D900/D900E)
C821	1-162-970-11	CERAMIC CHIP	0.01uF	10% 25V	(D900E)
C822	1-115-566-11	CERAMIC CHIP	4.7uF	10% 10V	(D900/D900E)
C823	1-165-176-11	CERAMIC CHIP	0.047uF	10% 16V	(D900/D900E)
C824	1-107-826-11	CERAMIC CHIP	0.1uF	10% 16V	(D900/D900E)
C825	1-162-970-11	CERAMIC CHIP	0.01uF	10% 25V	(D900E)
C826	1-164-004-11	CERAMIC CHIP	0.1uF	10% 25V	(D900/D900E)
C828	1-162-970-11	CERAMIC CHIP	0.01uF	10% 25V	(D900E)
C829	1-162-970-11	CERAMIC CHIP	0.01uF	10% 25V	(D900E)
C830	1-162-926-11	CERAMIC CHIP	82PF	5% 50V	(D900E)
C832	1-162-970-11	CERAMIC CHIP	0.01uF	10% 25V	(D900/D900E)
C833	1-115-467-11	CERAMIC CHIP	0.22uF	10% 10V	(D900/D900E)
C834	1-107-682-11	CERAMIC CHIP	1uF	10% 16V	(D900/D900E)
C836	1-107-682-11	CERAMIC CHIP	1uF	10% 16V	(D900/D900E)
C837	1-107-682-11	CERAMIC CHIP	1uF	10% 16V	(D900/D900E)
C838	1-107-682-11	CERAMIC CHIP	1uF	10% 16V	(D900/D900E)
C839	1-162-970-11	CERAMIC CHIP	0.01uF	10% 25V	(D900)
C840	1-162-970-11	CERAMIC CHIP	0.01uF	10% 25V	(D900/D900E)
C841	1-107-826-11	CERAMIC CHIP	0.1uF	10% 16V	(D900/D900E)
C844	1-162-970-11	CERAMIC CHIP	0.01uF	10% 25V	(D900/D900E)
C845	1-107-687-11	TANTAL. CHIP	3.3uF	20% 20V	(D900/D900E)
C901	1-135-259-11	TANTAL. CHIP	10uF	20% 6.3V	(D900/D900E)
C902	1-115-566-11	CERAMIC CHIP	4.7uF	10% 10V	(D900/D900E)
C903	1-113-682-11	TANTAL. CHIP	33uF	20% 10V	(D900/D900E)
C904	1-164-156-11	CERAMIC CHIP	0.1uF	25V	(D900/D900E)
C908	1-107-687-11	TANTAL. CHIP	3.3uF	20% 20V	(D900/D900E)
C909	1-164-156-11	CERAMIC CHIP	0.1uF	25V	(D900/D900E)
C923	1-107-826-11	CERAMIC CHIP	0.1uF	10% 16V	(D900/D900E)
C1101	1-107-826-11	CERAMIC CHIP	0.1uF	10% 16V	

Ref. No.	Part No.	Description			Remarks
C1102	1-164-943-11	CERAMIC CHIP	0.01uF	10%	16V
C1103	1-135-259-11	TANTAL. CHIP	10uF	20%	6.3V
C1104	1-164-943-11	CERAMIC CHIP	0.01uF	10%	16V
C1105	1-164-943-11	CERAMIC CHIP	0.01uF	10%	16V
C1107	1-164-943-11	CERAMIC CHIP	0.01uF	10%	16V
C1108	1-164-943-11	CERAMIC CHIP	0.01uF	10%	16V
C1109	1-164-943-11	CERAMIC CHIP	0.01uF	10%	16V
C1113	1-164-505-11	CERAMIC CHIP	2.2uF		16V
C1114	1-164-943-11	CERAMIC CHIP	0.01uF	10%	16V
C1115	1-164-505-11	CERAMIC CHIP	2.2uF		16V
C1116	1-164-943-11	CERAMIC CHIP	0.01uF	10%	16V
C1117	1-164-943-11	CERAMIC CHIP	0.01uF	10%	16V
C1119	1-164-943-11	CERAMIC CHIP	0.01uF	10%	16V
C1120	1-164-505-11	CERAMIC CHIP	2.2uF		16V
C1121	1-104-851-11	TANTAL. CHIP	10uF	20%	10V
C1122	1-164-943-11	CERAMIC CHIP	0.01uF	10%	16V
C1123	1-164-943-11	CERAMIC CHIP	0.01uF	10%	16V
C1124	1-164-943-11	CERAMIC CHIP	0.01uF	10%	16V
C1125	1-164-505-11	CERAMIC CHIP	2.2uF		16V
C1126	1-164-943-11	CERAMIC CHIP	0.01uF	10%	16V
C1130	1-125-899-11	TANTAL. CHIP	220uF	20%	4V
C1131	1-135-149-21	TANTALUM CHIP	2.2uF	20%	10V
C1132	1-164-943-11	CERAMIC CHIP	0.01uF	10%	16V
C1134	1-135-149-21	TANTALUM CHIP	2.2uF	20%	10V
C1135	1-164-943-11	CERAMIC CHIP	0.01uF	10%	16V
C1136	1-164-943-11	CERAMIC CHIP	0.01uF	10%	16V
C1137	1-104-851-11	TANTAL. CHIP	10uF	20%	10V
C1138	1-164-943-11	CERAMIC CHIP	0.01uF	10%	16V
C1139	1-164-943-11	CERAMIC CHIP	0.01uF	10%	16V
C1145	1-125-899-11	TANTAL. CHIP	220uF	20%	4V
C1146	1-164-943-11	CERAMIC CHIP	0.01uF	10%	16V
C1147	1-164-943-11	CERAMIC CHIP	0.01uF	10%	16V
C1153	1-164-943-11	CERAMIC CHIP	0.01uF	10%	16V
C1154	1-164-943-11	CERAMIC CHIP	0.01uF	10%	16V
C1155	1-164-943-11	CERAMIC CHIP	0.01uF	10%	16V
C1156	1-104-847-11	TANTAL. CHIP	22uF	20%	4V
C1157	1-104-847-11	TANTAL. CHIP	22uF	20%	4V
C1158	1-164-943-11	CERAMIC CHIP	0.01uF	10%	16V
C1160	1-164-943-11	CERAMIC CHIP	0.01uF	10%	16V
C1161	1-164-937-11	CERAMIC CHIP	0.001uF	10%	16V (D300/D900/D900E)
C1173	1-164-943-11	CERAMIC CHIP	0.01uF	10%	16V
C1200	1-164-880-11	CERAMIC CHIP	180PF	5%	16V
C1201	1-104-851-11	TANTAL. CHIP	10uF	20%	10V
C1202	1-164-943-11	CERAMIC CHIP	0.01uF	10%	16V
C1203	1-164-943-11	CERAMIC CHIP	0.01uF	10%	16V
C1204	1-164-860-11	CERAMIC CHIP	27PF	5%	16V
C1206	1-164-943-11	CERAMIC CHIP	0.01uF	10%	16V
C1207	1-104-913-11	TANTAL. CHIP	10uF	20%	16V
C1208	1-164-848-11	CERAMIC CHIP	8PF	0.5PF	16V
C1210	1-164-937-11	CERAMIC CHIP	0.001uF	10%	16V
C1211	1-135-212-21	TANTAL. CHIP	2.2uF	20%	35V
C1212	1-107-820-11	CERAMIC CHIP	0.1uF		16V
C1213	1-107-820-11	CERAMIC CHIP	0.1uF		16V
C1214	1-164-943-11	CERAMIC CHIP	0.01uF	10%	16V
C1215	1-135-091-00	TANTALUM CHIP	1uF	20%	16V
C1216	1-164-943-11	CERAMIC CHIP	0.01uF	10%	16V

Ref. No.	Part No.	Description			Remarks
C1217	1-164-943-11	CERAMIC CHIP	0.01uF	10%	16V
C1218	1-164-943-11	CERAMIC CHIP	0.01uF	10%	16V
C1219	1-104-852-11	TANTAL. CHIP	22uF	20%	6.3V
C1220	1-164-943-11	CERAMIC CHIP	0.01uF	10%	16V
C1221	1-164-943-11	CERAMIC CHIP	0.01uF	10%	16V
C1222	1-104-852-11	TANTAL. CHIP	22uF	20%	6.3V
C1223	1-164-943-11	CERAMIC CHIP	0.01uF	10%	16V
C1224	1-135-091-00	TANTALUM CHIP	1uF	20%	16V
C1225	1-164-943-11	CERAMIC CHIP	0.01uF	10%	16V
C1226	1-135-091-00	TANTALUM CHIP	1uF	20%	16V
C1227	1-104-847-11	TANTAL. CHIP	22uF	20%	4V
C1228	1-104-847-11	TANTAL. CHIP	22uF	20%	4V
C1229	1-135-091-00	TANTALUM CHIP	1uF	20%	16V
C1230	1-135-091-00	TANTALUM CHIP	1uF	20%	16V
C1231	1-164-943-11	CERAMIC CHIP	0.01uF	10%	16V
C1232	1-135-091-00	TANTALUM CHIP	1uF	20%	16V
C1233	1-164-943-11	CERAMIC CHIP	0.01uF	10%	16V
C1234	1-135-091-00	TANTALUM CHIP	1uF	20%	16V
C1235	1-104-847-11	TANTAL. CHIP	22uF	20%	4V
C1236	1-164-943-11	CERAMIC CHIP	0.01uF	10%	16V
C1237	1-164-943-11	CERAMIC CHIP	0.01uF	10%	16V
C1238	1-164-943-11	CERAMIC CHIP	0.01uF	10%	16V
C1239	1-107-820-11	CERAMIC CHIP	0.1uF		16V
C1240	1-107-820-11	CERAMIC CHIP	0.1uF		16V
C1241	1-164-943-11	CERAMIC CHIP	0.01uF	10%	16V
C1242	1-164-943-11	CERAMIC CHIP	0.01uF	10%	16V
C1243	1-164-943-11	CERAMIC CHIP	0.01uF	10%	16V
C1244	1-164-943-11	CERAMIC CHIP	0.01uF	10%	16V
C1245	1-104-847-11	TANTAL. CHIP	22uF	20%	4V
C1246	1-104-847-11	TANTAL. CHIP	22uF	20%	4V
C1247	1-135-259-11	TANTAL. CHIP	10uF	20%	6.3V
C1248	1-135-259-11	TANTAL. CHIP	10uF	20%	6.3V
C2300	1-164-943-11	CERAMIC CHIP	0.01uF	10%	16V
C2301	1-164-943-11	CERAMIC CHIP	0.01uF	10%	16V
C2305	1-164-943-11	CERAMIC CHIP	0.01uF	10%	16V
C2307	1-164-943-11	CERAMIC CHIP	0.01uF	10%	16V
C2308	1-104-851-11	TANTAL. CHIP	10uF	20%	10V
C2309	1-107-820-11	CERAMIC CHIP	0.1uF		16V
C2310	1-107-820-11	CERAMIC CHIP	0.1uF		16V
C2311	1-107-820-11	CERAMIC CHIP	0.1uF		16V
C2312	1-107-820-11	CERAMIC CHIP	0.1uF		16V
C2313	1-107-820-11	CERAMIC CHIP	0.1uF		16V
C2314	1-107-820-11	CERAMIC CHIP	0.1uF		16V
C2315	1-107-820-11	CERAMIC CHIP	0.1uF		16V
C2317	1-107-819-11	CERAMIC CHIP	0.022uF	10%	16V
C2318	1-104-847-11	TANTAL. CHIP	22uF	20%	4V
C2319	1-164-943-11	CERAMIC CHIP	0.01uF	10%	16V
C2320	1-164-943-11	CERAMIC CHIP	0.01uF	10%	16V
C2321	1-164-943-11	CERAMIC CHIP	0.01uF	10%	16V
C2324	1-164-943-11	CERAMIC CHIP	0.01uF	10%	16V
C2325	1-164-854-11	CERAMIC CHIP	15PF	5%	16V
C2326	1-164-858-11	CERAMIC CHIP	22PF	5%	16V
C2327	1-164-943-11	CERAMIC CHIP	0.01uF	10%	16V
C2328	1-104-851-11	TANTAL. CHIP	10uF	20%	10V
C2329	1-164-943-11	CERAMIC CHIP	0.01uF	10%	16V

CB-61

Ref. No.	Part No.	Description			Remarks
C2330	1-164-943-11	CERAMIC CHIP	0.01uF	10%	16V
C2331	1-164-943-11	CERAMIC CHIP	0.01uF	10%	16V
C2332	1-164-943-11	CERAMIC CHIP	0.01uF	10%	16V
C2335	1-164-943-11	CERAMIC CHIP	0.01uF	10%	16V
C3900	1-164-939-11	CERAMIC CHIP	0.0022uF	10%	16V
C3901	1-164-939-11	CERAMIC CHIP	0.0022uF	10%	16V
C3902	1-164-315-11	CERAMIC CHIP	470PF	5%	50V
C3903	1-164-315-11	CERAMIC CHIP	470PF	5%	50V
C3904	1-162-915-11	CERAMIC CHIP	10PF	0.5PF	50V
C3905	1-164-315-11	CERAMIC CHIP	470PF	5%	50V
C3906	1-162-915-11	CERAMIC CHIP	10PF	0.5PF	50V
C3907	1-113-981-11	TANTAL. CHIP	22uF	20%	20V (D900/D900E)
C3908	1-113-981-11	TANTAL. CHIP	22uF	20%	20V
C3909	1-162-919-11	CERAMIC CHIP	22PF	5%	50V
C3910	1-113-981-11	TANTAL. CHIP	22uF	20%	20V
C3911	1-162-969-11	CERAMIC CHIP	0.0068uF	10%	25V
C3912	1-113-981-11	TANTAL. CHIP	22uF	20%	20V
C3913	1-164-315-11	CERAMIC CHIP	470PF	5%	50V
C3914	1-164-387-11	CERAMIC CHIP	240PF	5%	50V
C3915	1-115-467-11	CERAMIC CHIP	0.22uF	10%	10V
C3916	1-113-981-11	TANTAL. CHIP	22uF	20%	20V
C3917	1-164-315-11	CERAMIC CHIP	470PF	5%	50V
C3918	1-165-176-11	CERAMIC CHIP	0.047uF	10%	16V
C3919	1-107-826-11	CERAMIC CHIP	0.1uF	10%	16V
C3920	1-164-156-11	CERAMIC CHIP	0.1uF		25V
C3921	1-162-919-11	CERAMIC CHIP	22PF	5%	50V
C3922	1-115-467-11	CERAMIC CHIP	0.22uF	10%	10V
C3923	1-164-315-11	CERAMIC CHIP	470PF	5%	50V
C3924	1-164-315-11	CERAMIC CHIP	470PF	5%	50V
C3925	1-164-315-11	CERAMIC CHIP	470PF	5%	50V
C3926	1-162-915-11	CERAMIC CHIP	10PF	0.5PF	50V
C3927	1-162-915-11	CERAMIC CHIP	10PF	0.5PF	50V
C3928	1-164-940-11	CERAMIC CHIP	0.0033uF	10%	16V
C3929	1-162-966-11	CERAMIC CHIP	0.0022uF	10%	50V
C3930	1-115-566-11	CERAMIC CHIP	4.7uF	10%	10V
C3931	1-164-506-11	CERAMIC CHIP	4.7uF		16V (D900/D900E)
C3932	1-115-566-11	CERAMIC CHIP	4.7uF	10%	10V
C3933	1-115-566-11	CERAMIC CHIP	4.7uF	10%	10V
C3934	1-115-467-11	CERAMIC CHIP	0.22uF	10%	10V
C3935	1-115-566-11	CERAMIC CHIP	4.7uF	10%	10V (D900/D900E)
C3936	1-107-682-11	CERAMIC CHIP	1uF	10%	16V (D900/D900E)
C3937	1-164-299-11	CERAMIC CHIP	0.22uF	10%	25V (D900/D900E)
C3938	1-115-566-11	CERAMIC CHIP	4.7uF	10%	10V
C3939	1-115-566-11	CERAMIC CHIP	4.7uF	10%	10V
C3940	1-164-939-11	CERAMIC CHIP	0.0022uF	10%	16V (D900/D900E)
C3941	1-107-826-11	CERAMIC CHIP	0.1uF	10%	16V
C3942	1-115-566-11	CERAMIC CHIP	4.7uF	10%	10V
C3943	1-115-566-11	CERAMIC CHIP	4.7uF	10%	10V
C3944	1-104-851-11	TANTAL. CHIP	10uF	20%	10V
C3945	1-104-851-11	TANTAL. CHIP	10uF	20%	10V

Ref. No.	Part No.	Description			Remarks
C3946	1-164-939-11	CERAMIC CHIP	0.0022uF	10%	16V (D900/D900E)
C3947	1-115-566-11	CERAMIC CHIP	4.7uF	10%	10V
C3948	1-104-851-11	TANTAL. CHIP	10uF	20%	10V
C3949	1-162-966-11	CERAMIC CHIP	0.0022uF	10%	50V (D900/D900E)
C3950	1-135-079-21	TANTALUM CHIP	3.3uF	10%	35V
C3951	1-104-913-11	TANTAL. CHIP	10uF	20%	16V
C3952	1-104-913-11	TANTAL. CHIP	10uF	20%	16V
C3953	1-104-913-11	TANTAL. CHIP	10uF	20%	16V
C3954	1-113-682-11	TANTAL. CHIP	33uF	20%	10V
C3955	1-104-851-11	TANTAL. CHIP	10uF	20%	10V
C3956	1-135-214-21	TANTAL. CHIP	4.7uF	20%	20V
C3957	1-107-819-11	CERAMIC CHIP	0.022uF	10%	16V (D900/D900E)
C3958	1-104-913-11	TANTAL. CHIP	10uF	20%	16V
C3959	1-135-181-21	TANTALUM CHIP	4.7uF	20%	6.3V
C3960	1-109-982-11	CERAMIC CHIP	1uF	10%	10V (D900/D900E)
C3961	1-164-004-11	CERAMIC CHIP	0.1uF	10%	25V (D900/D900E)
C3962	1-164-227-11	CERAMIC CHIP	0.022uF	10%	25V (D900/D900E)
C3963	1-107-823-11	CERAMIC CHIP	0.47uF	10%	16V (D900/D900E)
C3964	1-164-227-11	CERAMIC CHIP	0.022uF	10%	25V (D900/D900E)
C3965	1-104-851-11	TANTAL. CHIP	10uF	20%	10V
C3966	1-107-819-11	CERAMIC CHIP	0.022uF	10%	16V (D900/D900E)
C3967	1-115-566-11	CERAMIC CHIP	4.7uF	10%	10V
C3968	1-113-682-11	TANTAL. CHIP	33uF	20%	10V
C3969	1-113-682-11	TANTAL. CHIP	33uF	20%	10V
C3970	1-162-970-11	CERAMIC CHIP	0.01uF	10%	25V
C3971	1-162-970-11	CERAMIC CHIP	0.01uF	10%	25V
C3972	1-162-970-11	CERAMIC CHIP	0.01uF	10%	25V
C3973	1-135-091-00	TANTALUM CHIP	1uF	20%	16V
C3974	1-113-981-11	TANTAL. CHIP	22uF	20%	20V (D300E)
C7502	1-109-982-11	CERAMIC CHIP	1uF	10%	10V
C7503	1-109-982-11	CERAMIC CHIP	1uF	10%	10V
C7504	1-104-851-11	TANTAL. CHIP	10uF	20%	10V
C7505	1-110-569-11	TANTAL. CHIP	47uF	20%	6.3V
C7506	1-110-569-11	TANTAL. CHIP	47uF	20%	6.3V
C7507	1-164-943-11	CERAMIC CHIP	0.01uF	10%	16V
C7508	1-110-569-11	TANTAL. CHIP	47uF	20%	6.3V
C7509	1-104-851-11	TANTAL. CHIP	10uF	20%	10V
C7510	1-107-820-11	CERAMIC CHIP	0.1uF		16V
C7511	1-104-851-11	TANTAL. CHIP	10uF	20%	10V
C7512	1-113-682-11	TANTAL. CHIP	33uF	20%	10V
C7513	1-104-851-11	TANTAL. CHIP	10uF	20%	10V
C7514	1-109-982-11	CERAMIC CHIP	1uF	10%	10V
C7515	1-109-982-11	CERAMIC CHIP	1uF	10%	10V
C7516	1-104-851-11	TANTAL. CHIP	10uF	20%	10V
C7517	1-113-682-11	TANTAL. CHIP	33uF	20%	10V
C7518	1-164-939-11	CERAMIC CHIP	0.0022uF	10%	16V
C7519	1-164-939-11	CERAMIC CHIP	0.0022uF	10%	16V
C7520	1-109-982-11	CERAMIC CHIP	1uF	10%	10V
C7521	1-109-982-11	CERAMIC CHIP	1uF	10%	10V
C7522	1-104-851-11	TANTAL. CHIP	10uF	20%	10V

Ref. No.	Part No.	Description			Remarks
C7524	1-104-851-11	TANTAL. CHIP	10uF	20%	10V
C7525	1-164-943-11	CERAMIC CHIP	0.01uF	10%	16V
C7526	1-164-943-11	CERAMIC CHIP	0.01uF	10%	16V
C7527	1-104-851-11	TANTAL. CHIP	10uF	20%	10V
C7529	1-110-569-11	TANTAL. CHIP	47uF	20%	6.3V
C7534	1-164-935-11	CERAMIC CHIP	470PF	10%	16V
C7536	1-164-935-11	CERAMIC CHIP	470PF	10%	16V
C7540	1-164-935-11	CERAMIC CHIP	470PF	10%	16V
C7541	1-164-935-11	CERAMIC CHIP	470PF	10%	16V
C7542	1-164-935-11	CERAMIC CHIP	470PF	10%	16V
C7543	1-164-935-11	CERAMIC CHIP	470PF	10%	16V
C7544	1-104-851-11	TANTAL. CHIP	10uF	20%	10V
C7545	1-164-935-11	CERAMIC CHIP	470PF	10%	16V
C7546	1-164-935-11	CERAMIC CHIP	470PF	10%	16V
C7547	1-104-851-11	TANTAL. CHIP	10uF	20%	10V
C7559	1-113-682-11	TANTAL. CHIP	33uF	20%	10V
C7560	1-115-467-11	CERAMIC CHIP	0.22uF	10%	10V
C7563	1-109-982-11	CERAMIC CHIP	1uF	10%	10V
C7564	1-104-852-11	TANTAL. CHIP	22uF	20%	6.3V
C7565	1-109-982-11	CERAMIC CHIP	1uF	10%	10V
C7566	1-109-982-11	CERAMIC CHIP	1uF	10%	10V
C7567	1-109-982-11	CERAMIC CHIP	1uF	10%	10V
C7568	1-109-982-11	CERAMIC CHIP	1uF	10%	10V
C7569	1-109-982-11	CERAMIC CHIP	1uF	10%	10V
C7570	1-109-982-11	CERAMIC CHIP	1uF	10%	10V
C7571	1-109-982-11	CERAMIC CHIP	1uF	10%	10V
C7572	1-104-851-11	TANTAL. CHIP	10uF	20%	10V
C7573	1-104-851-11	TANTAL. CHIP	10uF	20%	10V
C7576	1-110-569-11	TANTAL. CHIP	47uF	20%	6.3V
C7577	1-110-569-11	TANTAL. CHIP	47uF	20%	6.3V
C7801	1-107-826-11	CERAMIC CHIP	0.1uF	10%	16V
C7803	1-107-826-11	CERAMIC CHIP	0.1uF	10%	16V
C7804	1-104-847-11	TANTAL. CHIP	22uF	20%	4V
C7806	1-107-826-11	CERAMIC CHIP	0.1uF	10%	16V
C7807	1-107-826-11	CERAMIC CHIP	0.1uF	10%	16V
C7808	1-164-227-11	CERAMIC CHIP	0.022uF	10%	25V
C7809	1-109-982-11	CERAMIC CHIP	1uF	10%	10V
C7810	1-104-851-11	TANTAL. CHIP	10uF	20%	10V
C7813	1-104-908-11	TANTAL. CHIP	47uF	20%	4V
C7814	1-104-908-11	TANTAL. CHIP	47uF	20%	4V
C7815	1-104-908-11	TANTAL. CHIP	47uF	20%	4V
C7816	1-104-908-11	TANTAL. CHIP	47uF	20%	4V
C7820	1-104-851-11	TANTAL. CHIP	10uF	20%	10V
C8001	1-164-943-11	CERAMIC CHIP	0.01uF	10%	16V
C8002	1-164-943-11	CERAMIC CHIP	0.01uF	10%	16V
C8401	1-164-943-11	CERAMIC CHIP	0.01uF	10%	16V
C8402	1-135-259-11	TANTAL. CHIP	10uF	20%	6.3V
C8403	1-164-943-11	CERAMIC CHIP	0.01uF	10%	16V
C8404	1-135-201-11	TANTALUM CHIP	10uF	20%	4V
C8405	1-135-259-11	TANTAL. CHIP	10uF	20%	6.3V
C8406	1-164-943-11	CERAMIC CHIP	0.01uF	10%	16V
C8407	1-164-943-11	CERAMIC CHIP	0.01uF	10%	16V
C8408	1-164-943-11	CERAMIC CHIP	0.01uF	10%	16V
C8409	1-135-259-11	TANTAL. CHIP	10uF	20%	6.3V
C8410	1-107-823-11	CERAMIC CHIP	0.47uF	10%	16V
C8411	1-107-823-11	CERAMIC CHIP	0.47uF	10%	16V
C8412	1-135-091-00	TANTALUM CHIP	1uF	20%	16V
C8413	1-135-181-21	TANTALUM CHIP	4.7uF	20%	6.3V
C8414	1-164-943-11	CERAMIC CHIP	0.01uF	10%	16V
C8415	1-164-668-11	CERAMIC CHIP	510PF	5%	50V

Ref. No.	Part No.	Description			Remarks
C8416	1-109-982-11	CERAMIC CHIP	1uF	10%	10V
C8417	1-164-844-11	CERAMIC CHIP	4PF	0.25PF	16V
C8418	1-109-982-11	CERAMIC CHIP	1uF	10%	10V
C8419	1-107-826-11	CERAMIC CHIP	0.1uF	10%	16V
C8420	1-164-943-11	CERAMIC CHIP	0.01uF	10%	16V
C8421	1-164-943-11	CERAMIC CHIP	0.01uF	10%	16V
C8422	1-107-826-11	CERAMIC CHIP	0.1uF	10%	16V
C8423	1-164-874-11	CERAMIC CHIP	100PF	5%	16V
C8424	1-104-847-11	TANTAL. CHIP	22uF	20%	4V
C8425	1-164-943-11	CERAMIC CHIP	0.01uF	10%	16V
C8426	1-107-823-11	CERAMIC CHIP	0.47uF	10%	16V
C8427	1-107-823-11	CERAMIC CHIP	0.47uF	10%	16V
C8428	1-107-823-11	CERAMIC CHIP	0.47uF	10%	16V
C8429	1-104-760-11	CERAMIC CHIP	0.047uF	10%	50V
C8430	1-164-943-11	CERAMIC CHIP	0.01uF	10%	16V
C8431	1-164-864-11	CERAMIC CHIP	39PF	5%	16V
C8432	1-164-862-11	CERAMIC CHIP	33PF	5%	16V
C8434	1-135-201-11	TANTALUM CHIP	10uF	20%	4V
C9003	1-104-847-11	TANTAL. CHIP	22uF	20%	4V
C9004	1-135-259-11	TANTAL. CHIP	10uF	20%	6.3V
C9005	1-107-823-11	CERAMIC CHIP	0.47uF	10%	16V
C9006	1-164-943-11	CERAMIC CHIP	0.01uF	10%	16V
C9007	1-104-847-11	TANTAL. CHIP	22uF	20%	4V
C9009	1-164-943-11	CERAMIC CHIP	0.01uF	10%	16V
C9010	1-110-569-11	TANTAL. CHIP	47uF	20%	6.3V
C9011	1-104-847-11	TANTAL. CHIP	22uF	20%	4V
C9012	1-164-943-11	CERAMIC CHIP	0.01uF	10%	16V
C9013	1-109-935-11	TANTAL. CHIP	4.7uF	20%	6.3V
C9014	1-164-943-11	CERAMIC CHIP	0.01uF	10%	16V
C9015	1-164-850-11	CERAMIC CHIP	10PF	0.5PF	16V
C9016	1-109-982-11	CERAMIC CHIP	1uF	10%	10V
C9017	1-164-874-11	CERAMIC CHIP	100PF	5%	16V
C9018	1-164-941-11	CERAMIC CHIP	0.0047uF	10%	16V
C9019	1-164-866-11	CERAMIC CHIP	47PF	5%	16V
C9020	1-164-943-11	CERAMIC CHIP	0.01uF	10%	16V
C9021	1-107-819-11	CERAMIC CHIP	0.022uF	10%	16V
C9022	1-104-851-11	TANTAL. CHIP	10uF	20%	10V
C9023	1-164-949-11	CERAMIC CHIP	0.047uF		16V
C9024	1-164-943-11	CERAMIC CHIP	0.01uF	10%	16V
C9025	1-164-943-11	CERAMIC CHIP	0.01uF	10%	16V
C9026	1-164-173-11	CERAMIC CHIP	0.0039uF	10%	50V
C9027	1-164-943-11	CERAMIC CHIP	0.01uF	10%	16V
C9028	1-164-943-11	CERAMIC CHIP	0.01uF	10%	16V
C9029	1-135-259-11	TANTAL. CHIP	10uF	20%	6.3V
C9030	1-164-943-11	CERAMIC CHIP	0.01uF	10%	16V
C9031	1-162-970-11	CERAMIC CHIP	0.01uF	10%	25V
C9032	1-162-970-11	CERAMIC CHIP	0.01uF	10%	25V
C9033	1-164-941-11	CERAMIC CHIP	0.0047uF	10%	16V
C9035	1-135-259-11	TANTAL. CHIP	10uF	20%	6.3V
C9036	1-135-259-11	TANTAL. CHIP	10uF	20%	6.3V
C9038	1-164-943-11	CERAMIC CHIP	0.01uF	10%	16V
C9041	1-135-259-11	TANTAL. CHIP	10uF	20%	6.3V
C9043	1-164-943-11	CERAMIC CHIP	0.01uF	10%	16V
C9044	1-164-943-11	CERAMIC CHIP (D900E)	0.01uF	10%	16V
C9045	1-164-943-11	CERAMIC CHIP	0.01uF	10%	16V

CB-61

Ref. No.	Part No.	Description			Remarks
C9046	1-109-982-11	CERAMIC CHIP	1uF	10%	10V
C9047	1-164-947-11	CERAMIC CHIP	0.01uF		16V
C9048	1-135-259-11	TANTAL. CHIP	10uF	20%	6.3V
C9049	1-135-091-00	TANTALUM CHIP	1uF	20%	16V
C9050	1-164-943-11	CERAMIC CHIP	0.01uF	10%	16V
C9052	1-164-943-11	CERAMIC CHIP	0.01uF	10%	16V
C9053	1-135-091-00	TANTALUM CHIP	1uF	20%	16V
C9054	1-164-943-11	CERAMIC CHIP	0.01uF	10%	16V
C9055	1-135-091-00	TANTALUM CHIP	1uF	20%	16V
C9056	1-135-091-00	TANTALUM CHIP	1uF	20%	16V
C9057	1-164-854-11	CERAMIC CHIP	15PF	5%	16V
C9058	1-104-851-11	TANTAL. CHIP	10uF	20%	10V
C9059	1-135-259-11	TANTAL. CHIP	10uF	20%	6.3V
C9062	1-164-943-11	CERAMIC CHIP	0.01uF	10%	16V
C9063	1-164-943-11	CERAMIC CHIP	0.01uF	10%	16V
C9064	1-164-935-11	CERAMIC CHIP	470PF	10%	16V
C9065	1-104-851-11	TANTAL. CHIP	10uF	20%	10V
C9066	1-135-259-11	TANTAL. CHIP	10uF	20%	6.3V
C9067	1-164-943-11	CERAMIC CHIP	0.01uF	10%	16V
C9068	1-104-851-11	TANTAL. CHIP	10uF	20%	10V
C9069	1-104-851-11	TANTAL. CHIP	10uF	20%	10V
C9070	1-164-943-11	CERAMIC CHIP	0.01uF	10%	16V
C9071	1-135-259-11	TANTAL. CHIP	10uF	20%	6.3V
C9072	1-164-943-11	CERAMIC CHIP	0.01uF	10%	16V
C9073	1-135-259-11	TANTAL. CHIP	10uF	20%	6.3V
C9074	1-164-943-11	CERAMIC CHIP	0.01uF	10%	16V
C9075	1-164-943-11	CERAMIC CHIP	0.01uF	10%	16V
C9077	1-164-943-11	CERAMIC CHIP	0.01uF	10%	16V
C9078	1-109-982-11	CERAMIC CHIP	1uF	10%	10V
C9079	1-164-943-11	CERAMIC CHIP	0.01uF	10%	16V
C9080	1-164-941-11	CERAMIC CHIP	0.0047uF	10%	16V
C9081	1-135-149-21	TANTALUM CHIP	2.2uF	20%	10V
C9082	1-164-943-11	CERAMIC CHIP	0.01uF	10%	16V
C9083	1-164-940-11	CERAMIC CHIP	0.0033uF	10%	16V
C9084	1-164-844-11	CERAMIC CHIP	4PF	0.25PF	16V
C9085	1-164-866-11	CERAMIC CHIP	47PF	5%	16V
C9087	1-164-937-11	CERAMIC CHIP	0.001uF	10%	16V
C9088	1-164-935-11	CERAMIC CHIP	470PF	10%	16V
C9089	1-164-943-11	CERAMIC CHIP	0.01uF	10%	16V
C9090	1-164-943-11	CERAMIC CHIP	0.01uF	10%	16V
C9091	1-110-569-11	TANTAL. CHIP	47uF	20%	6.3V
C9092	1-135-259-11	TANTAL. CHIP	10uF	20%	6.3V
C9093	1-164-943-11	CERAMIC CHIP	0.01uF	10%	16V
C9096	1-115-156-11	CERAMIC CHIP	1uF		10V
C9098	1-107-826-11	CERAMIC CHIP	0.1uF	10%	16V
C9099	1-164-882-11	CERAMIC CHIP	220PF	5%	16V
C9100	1-164-934-11	CERAMIC CHIP	330PF	10%	16V
C9101	1-164-943-11	CERAMIC CHIP	0.01uF	10%	16V
C9103	1-164-862-11	CERAMIC CHIP	33PF	5%	16V (D300E/D900E)
C9103	1-164-866-11	CERAMIC CHIP	47PF	5%	16V (D300/D900)
C9104	1-164-862-11	CERAMIC CHIP	33PF	5%	16V (D300E/D900E)
C9104	1-164-866-11	CERAMIC CHIP	47PF	5%	16V (D300/D900)
C9105	1-164-874-11	CERAMIC CHIP	100PF	5%	16V
C9106	1-164-874-11	CERAMIC CHIP	100PF	5%	16V
C9107	1-164-874-11	CERAMIC CHIP	100PF	5%	16V

Ref. No.	Part No.	Description			Remarks
C9108	1-104-851-11	TANTAL. CHIP	10uF	20%	10V
C9401	1-164-943-11	CERAMIC CHIP	0.01uF	10%	16V
C9402	1-107-826-11	CERAMIC CHIP	0.1uF	10%	16V
C9404	1-104-851-11	TANTAL. CHIP	10uF	20%	10V
C9406	1-104-851-11	TANTAL. CHIP	10uF	20%	10V
C9407	1-164-943-11	CERAMIC CHIP	0.01uF	10%	16V
C9408	1-164-943-11	CERAMIC CHIP	0.01uF	10%	16V
C9409	1-164-943-11	CERAMIC CHIP	0.01uF	10%	16V
C9410	1-164-943-11	CERAMIC CHIP	0.01uF	10%	16V
C9411	1-165-176-11	CERAMIC CHIP	0.047uF	10%	16V
C9413	1-110-569-11	TANTAL. CHIP	47uF	20%	6.3V
C9414	1-104-851-11	TANTAL. CHIP	10uF	20%	10V
C9415	1-164-866-11	CERAMIC CHIP	47PF	5%	16V
C9416	1-164-928-11	CERAMIC CHIP	270PF	5%	16V
C9501	1-164-943-11	CERAMIC CHIP	0.01uF	10%	16V
C9504	1-164-943-11	CERAMIC CHIP	0.01uF	10%	16V
C9505	1-104-851-11	TANTAL. CHIP	10uF	20%	10V
C9507	1-107-820-11	CERAMIC CHIP	0.1uF		16V
C9508	1-164-860-11	CERAMIC CHIP	27PF	5%	16V (D300/D900)
C9508	1-164-862-11	CERAMIC CHIP	33PF	5%	16V (D300E/D900E)
C9509	1-107-826-11	CERAMIC CHIP	0.1uF	10%	16V
C9510	1-164-854-11	CERAMIC CHIP	15PF	5%	16V (D300/D900)
C9512	1-107-826-11	CERAMIC CHIP	0.1uF	10%	16V
C9513	1-164-882-11	CERAMIC CHIP	220PF	5%	16V
C9514	1-107-820-11	CERAMIC CHIP	0.1uF		16V
		< CONNECTOR >			
CN3900	1-569-775-21	PIN, CONNECTOR 5P			
CN3901	1-778-506-21	PIN, CONNECTOR (PC BOARD) 2P			
CN9921	1-778-081-11	CONNECTOR, BOARD TO BOARD 80P			
CN9922	1-778-597-21	CONNECTOR, BOARD TO BOARD 50P			
CN9923	1-774-932-21	CONNECTOR, FFC/FPC (ZIF) 32P(D900/D900E)			
CN9924	1-691-374-11	CONNECTOR, FFC/FPC 10P			
CN9925	1-764-708-21	CONNECTOR, FFC/FPC (LIF) 9P			
CN9926	1-766-759-11	CONNECTOR, FFC/FPC 4P			
CN9927	1-766-340-21	CONNECTOR, FFC/FPC 10P			
CN9928	1-778-595-21	CONNECTOR, BOARD TO BOARD 20P			
CN9929	1-764-704-21	CONNECTOR, FFC/FPC (LIF) 5P			
CN9930	1-778-597-21	CONNECTOR, BOARD TO BOARD 50P			
CN9931	1-770-543-21	CONNECTOR, FFC/FPC 40P			
CN9932	1-778-595-21	CONNECTOR, BOARD TO BOARD 20P			
		< TRIMMER >			
CT1200	1-141-423-61	CAP, ADJ 20PF			
		< DIODE >			
D801	8-713-102-80	DIODE	1T369-01-T8A		(D900E)
D802	8-719-420-51	DIODE	MA729-TX		(D900/D900E)
D1200	8-713-101-85	DIODE	1T363-01-T8A		
D2300	8-719-421-27	DIODE	MA728-TX		
D2301	8-719-056-23	DIODE	MA2S111-(K8).SO		
D2302	8-719-420-51	DIODE	MA729-TX		
D2303	8-719-420-51	DIODE	MA729-TX		
D2304	8-719-056-23	DIODE	MA2S111-(K8).SO		
D2305	8-719-056-23	DIODE	MA2S111-(K8).SO		
D3903	8-719-062-16	DIODE	01ZA8.2(TPL3)		
D3904	8-719-801-48	DIODE	1SS193-TE85L		(D900/D900E)

Ref. No.	Part No.	Description	Remarks
D3905	8-719-801-48	DIODE 1SS193-TE85L	(D900/D900E)
D3906	8-719-801-48	DIODE 1SS193-TE85L	(D900/D900E)
D7502	8-719-056-23	DIODE MA2S111-(K8).SO	
D7504	8-719-056-23	DIODE MA2S111-(K8).SO	
D7506	8-719-421-67	DIODE MA132WK-(K8).SO	
D7507	8-719-056-23	DIODE MA2S111-(K8).SO	
D7508	8-719-056-23	DIODE MA2S111-(K8).SO	
D7510	8-719-056-23	DIODE MA2S111-(K8).SO	
D7511	8-719-421-67	DIODE MA132WK-(K8).SO	
D7512	8-719-056-23	DIODE MA2S111-(K8).SO	
D7513	8-719-056-23	DIODE MA2S111-(K8).SO	
D7514	8-719-421-67	DIODE MA132WK-(K8).SO	
D7802	8-719-062-16	DIODE 01ZA8.2(TPL3)	
D9001	8-719-055-86	DIODE KV1470TL1-3	
D9002	8-719-017-82	DIODE MA8036-TX	
D9901	8-719-062-16	DIODE 01ZA8.2(TPL3)	
D9902	8-719-062-16	DIODE 01ZA8.2(TPL3)	
D9903	8-719-062-16	DIODE 01ZA8.2(TPL3)	
D9904	8-719-062-16	DIODE 01ZA8.2(TPL3)	
D9905	8-719-062-16	DIODE 01ZA8.2(TPL3)	
D9906	8-719-062-16	DIODE 01ZA8.2(TPL3)	
D9907	8-719-062-16	DIODE 01ZA8.2(TPL3)	
D9908	8-719-062-16	DIODE 01ZA8.2(TPL3)	
D9909	8-719-062-16	DIODE 01ZA8.2(TPL3)	
D9910	8-719-062-16	DIODE 01ZA8.2(TPL3)	
D9911	8-719-062-16	DIODE 01ZA8.2(TPL3)	
D9912	8-719-062-16	DIODE 01ZA8.2(TPL3)	
D9913	8-719-041-31	DIODE 015Z12-TPH3	
D9914	8-719-041-31	DIODE 015Z12-TPH3	
		< FERRITE BEAD >	
FB801	1-414-385-11	INDUCTOR CHIP 0UH	(D900/D900E)
FB802	1-414-385-11	INDUCTOR CHIP 0UH	(D900/D900E)
FB803	1-414-385-11	INDUCTOR CHIP 0UH	(D900/D900E)
FB804	1-414-385-11	INDUCTOR CHIP 0UH	(D900/D900E)
FB1101	1-543-955-11	FERRITE 0UH	
FB7501	1-543-955-11	FERRITE 0UH	
FB9001	1-543-955-11	FERRITE 0UH	
FB9401	1-543-955-11	FERRITE 0UH	
FB9501	1-543-955-11	FERRITE 0UH	
FB9901	1-414-235-11	INDUCTOR CHIP 0UH	
		< FILTER >	
FL1101	1-233-733-21	FILTER, LOW PASS	
FL1200	1-233-502-11	FILTER, BAND PASS (D300/D900)	
FL1200	1-233-591-11	FILTER, BAND PASS (D300E/D900E)	
FL1201	1-233-345-21	FILTER, LOW PASS (5.5MHz)	
FL1202	1-233-345-21	FILTER, LOW PASS (5.5MHz)	
FL9001	1-233-732-21	FILTER, BAND PASS (3.58MHz)	(D300/D900)
FL9001	1-233-735-21	FILTER, BAND PASS (4.43MHz)	(D300E/D900E)
FL9002	1-233-733-21	FILTER, LOW PASS	
		< IC >	
IC801	8-752-070-03	IC CXA1785AR-T4	(D900/D900E)
IC802	8-759-427-85	IC MB88146APFV-G-BND-ER	(D900/D900E)
IC803	8-759-523-81	IC TC74VHC08FT(EL)	(D900/D900E)
IC804	8-759-196-97	IC TC7SH32FU-TE85R	(D900/D900E)
IC902	8-759-359-49	IC NJM3414AV(TE2)	(D900/D900E)

Ref. No.	Part No.	Description	Remarks
IC1101	1-801-474-11	IC TGA-D3100HA	
IC1102	8-759-082-58	IC TC7W08FU(TE12R)	
IC1103	8-752-081-19	IC CXA2008R-T4	
IC1104	8-759-526-52	IC uPD6466GS-626-GLG-E2	
IC1105	8-759-082-61	IC TC4W53FU(TE12R)	
IC1108	8-759-432-78	IC MM1111XFF	
IC1109	8-759-337-26	IC MM1115XFBE	
IC1200	8-752-374-89	IC CXD2192Q-T4	
IC1201	8-752-056-59	IC CXA1592R-T4	
IC2300	8-759-398-90	IC S-81236PG-P7-T1	
IC2301	8-759-424-79	IC S-8423YFS-T2	
IC2302	8-759-526-51	IC S579177PZ-TEB	
IC2303	8-759-445-93	IC AK6440AM-E2	
IC2304	8-759-536-72	IC TL1596CPWR	
IC3900	8-759-384-78	IC SN104241PM-TEB	
IC3902	8-759-447-75	IC S-81322HG-KW-T1	
IC7501	8-759-512-62	IC CXA1497AN-E2	
IC7502	8-759-536-71	IC TLV23621PWR	
IC7503	8-759-536-71	IC TLV23621PWR	
IC7504	8-759-326-98	IC AK4503-VF-E2	
IC7508	8-759-536-71	IC TLV23621PWR	
IC7509	8-759-391-88	IC MC14066BDTR2	
IC7801	8-759-456-30	IC BA7787FS-E2	
IC8001	8-759-427-85	IC MB88146APFV-G-BND-ER	
IC8002	8-759-427-85	IC MB88146APFV-G-BND-ER	
IC8401	8-759-498-52	IC LA9511W-TBM	
IC8402	8-759-464-04	IC S-81340HG-KJ-T1	
IC9002	8-752-070-65	IC CXA1950Q-T4	
IC9004	8-752-074-18	IC CXA2007R-T4	
IC9005	8-759-343-09	IC CXD2193AR-ER	
IC9006	8-759-523-03	IC TC74HC4066AFT(EL)	
IC9009	8-759-447-78	IC MN65752F-E2	
IC9010	8-759-447-77	IC TC7WH74FU(TE12R)	
IC9011	8-759-271-86	IC TC7SH04FU-TE85R	
IC9013	8-759-284-49	IC NJM2285V-TE2	
IC9401	8-759-457-75	IC MC141628FUEB	
IC9501	8-759-349-01	IC MC68HC68VBIFB	
IC9502	8-759-327-60	IC TC7W125FU-TE12R	
		< COIL >	
L802	1-412-962-11	INDUCTOR 82uH	(D900/D900E)
L803	1-414-755-11	INDUCTOR 22uH	(D900/D900E)
L804	1-412-956-21	INDUCTOR 27uH	(D900E)
L805	1-414-757-11	INDUCTOR 100uH	(D900/D900E)
L806	1-414-754-11	INDUCTOR 10uH	(D900/D900E)
L807	1-414-754-11	INDUCTOR 10uH	(D900/D900E)
L901	1-414-754-11	INDUCTOR 10uH	(D900/D900E)
L902	1-414-754-11	INDUCTOR 10uH	(D900/D900E)
L903	1-414-754-11	INDUCTOR 10uH	(D900/D900E)
L904	1-414-757-11	INDUCTOR 100uH	(D900/D900E)
L1101	1-414-754-11	INDUCTOR 10uH	
L1103	1-414-754-11	INDUCTOR 10uH	
L1200	1-414-398-11	INDUCTOR 10uH	
L1201	1-414-398-11	INDUCTOR 10uH	
L2301	1-414-078-11	INDUCTOR 10uH	
L3900	1-409-529-41	INDUCTOR 10uH	
L3901	1-409-529-41	INDUCTOR 10uH	
L3902	1-409-529-41	INDUCTOR 10uH	
L3903	1-414-406-11	INDUCTOR 220uH	
L3904	1-424-674-11	INDUCTOR 22uH	

CB-61

Ref. No.	Part No.	Description	Remarks
L3905	1-424-674-11	INDUCTOR 22uH	
L3906	1-409-532-41	INDUCTOR 33uH	
L3907	1-409-532-41	INDUCTOR 33uH	
L3908	1-424-674-11	INDUCTOR 22uH	
L3909	1-414-406-11	INDUCTOR 220uH (D900/D900E)	
L3910	1-414-396-21	INDUCTOR 4.7uH	
L3911	1-414-406-11	INDUCTOR 220uH (D900/D900E)	
L3912	1-414-072-11	INDUCTOR 1uH	
L3913	1-414-754-11	INDUCTOR 10uH (D900/D900E)	
L3914	1-414-396-21	INDUCTOR 4.7uH	
L3915	1-414-396-21	INDUCTOR 4.7uH	
L3917	1-414-396-21	INDUCTOR 4.7uH	
L3918	1-414-396-21	INDUCTOR 4.7uH	
L3919	1-414-398-11	INDUCTOR 10uH	
L7501	1-414-754-11	INDUCTOR 10uH	
L7505	1-414-754-11	INDUCTOR 10uH	
L8402	1-412-948-11	INDUCTOR 5.6uH	
L8403	1-412-957-11	INDUCTOR 33uH	
L8404	1-412-957-11	INDUCTOR 33uH	
L9001	1-414-754-11	INDUCTOR 10uH	
L9005	1-414-754-11	INDUCTOR 10uH	
L9006	1-414-754-11	INDUCTOR 10uH	
L9008	1-411-275-21	COIL, VARIABLE	
L9009	1-414-754-11	INDUCTOR 10uH	
L9010	1-414-754-11	INDUCTOR 10uH	
L9403	1-414-754-11	INDUCTOR 10uH	
L9404	1-414-754-11	INDUCTOR 10uH	
L9504	1-412-958-21	INDUCTOR 39uH (D300E/D900E)	
L9504	1-412-959-11	INDUCTOR 47uH (D300/D900)	
		< LINE FILTER >	
LF9901	1-409-755-11	FILTER, CHIP EMI (COMON MODE)	
LF9902	1-409-755-11	FILTER, CHIP EMI (COMON MODE)	
		< IC LINK >	
⚠PS3900	1-533-760-21	FUSE (SMD) 1.4A/24V (D300/D900)	
⚠PS3900	1-533-761-21	LINK, IC (SMD) 1.4A/24V (D300E/D900E)	
⚠PS3901	1-533-760-21	FUSE (SMD) 1.4A/24V (D300/D900)	
⚠PS3901	1-533-761-21	LINK, IC (SMD) 1.4A/24V (D300E/D900E)	
⚠PS3902	1-533-760-21	FUSE (SMD) 1.4A/24V (D300/D900)	
⚠PS3902	1-533-761-21	LINK, IC (SMD) 1.4A/24V (D300E/D900E)	
⚠PS3903	1-533-760-21	FUSE (SMD) 1.4A/24V (D300/D900)	
⚠PS3903	1-533-761-21	LINK, IC (SMD) 1.4A/24V (D300E/D900E)	
⚠PS3904	1-533-760-21	FUSE (SMD) 1.4A/24V (D300/D900)	
⚠PS3904	1-533-761-21	LINK, IC (SMD) 1.4A/24V (D300E/D900E)	
		< TRANSISTOR >	
Q801	8-729-037-52	TRANSISTOR 2SD2216J-QR(K8).SO (D900/D900E)	
Q802	8-729-037-53	TRANSISTOR 2SB1462J-QR(K8).SO (D900/D900E)	
Q805	8-729-037-52	TRANSISTOR 2SD2216J-QR(K8).SO (D900E)	
Q1101	8-729-037-53	TRANSISTOR 2SB1462J-QR(K8).SO	
Q1102	8-729-037-53	TRANSISTOR 2SB1462J-QR(K8).SO	
Q1104	8-729-037-74	TRANSISTOR UN9213J-(K8).SO	
Q1106	8-729-037-61	TRANSISTOR UN9113J-(K8).SO	
Q1108	8-729-037-72	TRANSISTOR UN9211J-(K8).SO	
Q1109	8-729-015-66	TRANSISTOR 2SC4919-TL	
Q1110	8-729-015-66	TRANSISTOR 2SC4919-TL	
Q1111	8-729-015-66	TRANSISTOR 2SC4919-TL	
Q1112	8-729-037-61	TRANSISTOR UN9113J-(K8).SO	
Q1113	8-729-037-61	TRANSISTOR UN9113J-(K8).SO	
Q1114	8-729-037-52	TRANSISTOR 2SD2216J-QR(K8).SO	
Q1201	8-729-037-52	TRANSISTOR 2SD2216J-QR(K8).SO	
Q1202	8-729-037-52	TRANSISTOR 2SD2216J-QR(K8).SO	
Q1203	8-729-037-52	TRANSISTOR 2SD2216J-QR(K8).SO	
Q1204	8-729-037-53	TRANSISTOR 2SB1462J-QR(K8).SO	
Q1205	8-729-037-52	TRANSISTOR 2SD2216J-QR(K8).SO	
Q1206	8-729-427-72	TRANSISTOR XP4501-TXE	
Q1207	8-729-037-53	TRANSISTOR 2SB1462J-QR(K8).SO	
Q1208	8-729-037-52	TRANSISTOR 2SD2216J-QR(K8).SO	
Q1209	8-729-427-72	TRANSISTOR XP4501-TXE	
Q1210	8-729-037-52	TRANSISTOR 2SD2216J-QR(K8).SO	
Q1211	8-729-427-72	TRANSISTOR XP4501-TXE	
Q1212	8-729-037-52	TRANSISTOR 2SD2216J-QR(K8).SO	
Q2301	8-729-037-61	TRANSISTOR UN9113J-(K8).SO	
Q2302	8-729-427-70	TRANSISTOR XP4401-TXE	
Q2303	8-729-141-48	TRANSISTOR 2SB624-T1BV4	
Q2304	8-729-024-48	TRANSISTOR 2SK1830-TE85L	
Q2305	8-729-032-62	TRANSISTOR 2SJ347-TE85L	
Q2306	8-729-037-72	TRANSISTOR UN9211J-(K8).SO	
Q2307	8-729-037-74	TRANSISTOR UN9213J-(K8).SO	
Q2308	8-729-037-72	TRANSISTOR UN9211J-(K8).SO	
Q2309	8-729-037-72	TRANSISTOR UN9211J-(K8).SO	
Q3903	8-729-033-14	TRANSISTOR FP107-TL	
Q3904	8-729-033-14	TRANSISTOR FP107-TL	
Q3905	8-729-033-14	TRANSISTOR FP107-TL	
Q3906	8-729-033-14	TRANSISTOR FP107-TL	
Q3907	8-729-033-14	TRANSISTOR FP107-TL	
Q3908	8-729-017-61	TRANSISTOR 2SB1581-T1	
Q3909	8-729-037-53	TRANSISTOR 2SB1462J-QR(K8).SO	
Q3910	8-729-427-72	TRANSISTOR XP4501-TXE	
Q3911	8-729-804-41	TRANSISTOR 2SB1122-ST-TD (D900/D900E)	
Q3912	8-729-037-74	TRANSISTOR UN9213J-(K8).SO (D900/D900E	
Q3913	8-729-041-23	TRANSISTOR NDS356AP (D900/D900E)	
Q3914	8-729-037-52	TRANSISTOR 2SD2216J-QR(K8).SO (D900/D900E)	
Q3915	8-729-804-41	TRANSISTOR 2SB1122-ST-TD	
Q3916	8-729-037-52	TRANSISTOR 2SD2216J-QR(K8).SO	
Q3917	8-729-037-52	TRANSISTOR 2SD2216J-QR(K8).SO (D900/D900E)	
Q3918	8-729-037-53	TRANSISTOR 2SB1462J-QR(K8).SO (D900/D900E)	
Q3919	8-729-037-53	TRANSISTOR 2SB1462J-QR(K8).SO (D900/D900E)	
Q3920	8-729-041-24	TRANSISTOR NDS355AN	
Q3921	8-729-041-24	TRANSISTOR NDS355AN	
Q3922	8-729-041-69	TRANSISTOR MMSF5P02HDR2	
Q3923	8-729-037-74	TRANSISTOR UN9213J-(K8).SO	
Q3924	8-729-042-58	TRANSISTOR UN9111J-(K8).SO (D900/D900E	
Q3925	8-729-037-74	TRANSISTOR UN9213J-(K8).SO (D900/D900E	
Q3926	8-729-037-74	TRANSISTOR UN9213J-(K8).SO (D900/D900E	
Q3927	8-729-042-58	TRANSISTOR UN9111J-(K8).SO (D900/D900E	

Note :	**Note :**
The components identified by mark ⚠ or dotted line with mark ⚠ are critical for safety. Replace only with part number specified.	Les composants identifiés par une marque ⚠ sont critiques pour la sécurité. Ne les remplacer que par une pièce portant le numéro spécifié.

Ref. No.	Part No.	Description	Remarks
Q3928	8-729-037-52	TRANSISTOR 2SD2216J-QR(K8).SO	(D900/D900E)
Q3929	8-729-041-23	TRANSISTOR NDS356AP (D900/D900E)	
Q3930	8-729-037-52	TRANSISTOR 2SD2216J-QR(K8).SO	
Q3931	8-729-804-41	TRANSISTOR 2SB1122-ST-TD	
Q3932	8-729-037-74	TRANSISTOR UN9213J-(K8).SO	
Q3933	8-729-037-52	TRANSISTOR 2SD2216J-QR(K8).SO	
Q3934	8-729-037-53	TRANSISTOR 2SB1462J-QR(K8).SO	
Q3935	8-729-037-52	TRANSISTOR 2SD2216J-QR(K8).SO	
Q7501	8-729-037-72	TRANSISTOR UN9211J-(K8).SO	
Q7502	8-729-037-53	TRANSISTOR 2SB1462J-QR(K8).SO	
Q7503	8-729-037-72	TRANSISTOR UN9211J-(K8).SO	
Q7505	8-729-427-72	TRANSISTOR XP4501-TXE	
Q7506	8-729-037-63	TRANSISTOR UN9115J-(K8).SO	
Q7507	8-729-037-61	TRANSISTOR UN9113J-(K8).SO	
Q7510	8-729-429-50	TRANSISTOR XP4312-TXE	
Q7511	8-729-427-46	TRANSISTOR XP4213-TXE	
Q7512	8-729-427-51	TRANSISTOR XP4215-TXE	
Q7513	8-729-427-72	TRANSISTOR XP4501-TXE	
Q7514	8-729-015-66	TRANSISTOR 2SC4919-TL	
Q7515	8-729-037-63	TRANSISTOR UN9115J-(K8).SO	
Q7801	8-729-037-78	TRANSISTOR UN9217J-(K8).SO	
Q7802	8-729-037-52	TRANSISTOR 2SD2216J-QR(K8).SO	
Q7803	8-729-037-52	TRANSISTOR 2SD2216J-QR(K8).SO	
Q7806	8-729-042-74	TRANSISTOR UN9216J-(K8).SO	
Q7807	8-729-042-74	TRANSISTOR UN9216J-(K8).SO	
Q7808	8-729-037-74	TRANSISTOR UN9213J-(K8).SO	
Q7810	8-729-037-74	TRANSISTOR UN9213J-(K8).SO	
Q8401	8-729-037-53	TRANSISTOR 2SB1462J-QR(K8).SO	
Q8402	8-729-037-52	TRANSISTOR 2SD2216J-QR(K8).SO	
Q8403	8-729-037-74	TRANSISTOR UN9213J-(K8).SO	
Q8404	8-729-122-63	TRANSISTOR 2SA1226-T1E4	
Q9001	8-729-037-52	TRANSISTOR 2SD2216J-QR(K8).SO	
Q9002	8-729-037-52	TRANSISTOR 2SD2216J-QR(K8).SO	
Q9003	8-729-427-74	TRANSISTOR XP4601-TXE	
Q9004	8-729-037-76	TRANSISTOR UN9215J-(K8).SO	
Q9005	8-729-037-74	TRANSISTOR UN9213J-(K8).SO	
Q9006	8-729-037-53	TRANSISTOR 2SB1462J-QR(K8).SO	
Q9007	8-729-427-72	TRANSISTOR XP4501-TXE	
Q9008	8-729-037-53	TRANSISTOR 2SB1462J-QR(K8).SO	
Q9009	8-729-037-53	TRANSISTOR 2SB1462J-QR(K8).SO	
Q9010	8-729-037-53	TRANSISTOR 2SB1462J-QR(K8).SO	
Q9011	8-729-037-53	TRANSISTOR 2SB1462J-QR(K8).SO	
Q9012	8-729-427-74	TRANSISTOR XP4601-TXE	
Q9013	8-729-427-72	TRANSISTOR XP4501-TXE	
Q9014	8-729-141-48	TRANSISTOR 2SB624-T1BV4	
Q9015	8-729-037-72	TRANSISTOR UN9211J-(K8).SO	
Q9016	8-729-037-53	TRANSISTOR 2SB1462J-QR(K8).SO	
Q9017	8-729-037-72	TRANSISTOR UN9211J-(K8).SO	
Q9020	8-729-037-53	TRANSISTOR 2SB1462J-QR(K8).SO	
Q9021	8-729-141-48	TRANSISTOR 2SB624-T1BV4	
Q9022	8-729-427-42	TRANSISTOR XP4211-TXE	
Q9023	8-729-427-42	TRANSISTOR XP4211-TXE	
Q9024	8-729-037-53	TRANSISTOR 2SB1462J-QR(K8).SO	
Q9025	8-729-037-74	TRANSISTOR UN9213J-(K8).SO	(D300/D900/D900E)
Q9401	8-729-427-74	TRANSISTOR XP4601-TXE	
Q9402	8-729-037-53	TRANSISTOR 2SB1462J-QR(K8).SO	
Q9403	8-729-427-74	TRANSISTOR XP4601-TXE	
Q9501	8-729-427-74	TRANSISTOR XP4601-TXE	
Q9502	8-729-037-53	TRANSISTOR 2SB1462J-QR(K8).SO	
Q9901	8-729-141-48	TRANSISTOR 2SB624-T1BV4	
Q9902	8-729-037-53	TRANSISTOR 2SB1462J-QR(K8).SO	
Q9903	8-729-037-72	TRANSISTOR UN9211J-(K8).SO	
Q9904	8-729-037-72	TRANSISTOR UN9211J-(K8).SO	

< RESISTOR >

R068	1-218-984-11	RES,CHIP	390K	5% 1/16W	
R801	1-216-839-11	METAL CHIP	33K	5% 1/16W	(D900/D900E)
R802	1-216-837-11	METAL CHIP	22K	5% 1/16W	(D900/D900E)
R803	1-218-855-11	RES,CHIP	2.2K	0.50% 1/16W	(D900/D900E)
R804	1-216-864-11	METAL CHIP	0	5% 1/16W	(D900/D900E)
R805	1-218-847-11	RES,CHIP	1K	0.50% 1/16W	(D900/D900E)
R806	1-218-949-11	RES,CHIP	470	5% 1/16W	(D900/D900E)
R807	1-218-974-11	RES,CHIP	56K	5% 1/16W	
R808	1-218-891-11	RES,CHIP	68K	0.50% 1/16W	
R809	1-216-831-11	METAL CHIP	6.8K	5% 1/16W	(D900E)
R811	1-216-829-11	METAL CHIP	4.7K	5% 1/16W	(D900/D900E)
R813	1-216-864-11	METAL CHIP	0	5% 1/16W	(D900E)
R815	1-216-827-11	METAL CHIP	3.3K	5% 1/16W	(D900/D900E)
R816	1-218-847-11	RES,CHIP	1K	0.50% 1/16W	(D900/D900E)
R817	1-218-855-11	RES,CHIP	2.2K	0.50% 1/16W	(D900/D900E)
R818	1-216-821-11	METAL CHIP	1K	5% 1/16W	(D900/D900E)
R819	1-216-843-11	METAL CHIP	68K	5% 1/16W	(D900/D900E)
R820	1-218-877-11	RES,CHIP	18K	0.50% 1/16W	(D900/D900E)
R821	1-216-851-11	METAL CHIP	330K	5% 1/16W	(D900/D900E)
R822	1-218-847-11	RES,CHIP	1K	0.50% 1/16W	(D900/D900E)
R823	1-216-837-11	METAL CHIP	22K	5% 1/16W	(D900/D900E)
R824	1-216-841-11	METAL CHIP	47K	5% 1/16W	(D900/D900E)
R826	1-218-974-11	RES,CHIP	56K	5% 1/16W	(D900/D900E)
R827	1-216-841-11	METAL CHIP	47K	5% 1/16W	(D900/D900E)
R829	1-216-841-11	METAL CHIP	47K	5% 1/16W	(D900/D900E)

CB-61

Ref. No.	Part No.	Description			Remarks
R830	1-218-847-11	RES,CHIP	1K	0.50% 1/16W	(D900/D900E)
R831	1-219-570-11	RES,CHIP	10M	5% 1/16W	(D900E)
R832	1-218-973-11	RES,CHIP	47K	5% 1/16W	(D900E)
R832	1-218-970-11	RES,CHIP	27K	5% 1/16W	(D900)
R833	1-216-835-11	METAL CHIP	15K	5% 1/16W	(D900/D900E)
R834	1-218-855-11	RES,CHIP	2.2K	0.50% 1/16W	(D900/D900E)
R835	1-216-841-11	METAL CHIP	47K	5% 1/16W	(D900E)
R835	1-216-843-11	METAL CHIP	68K	5% 1/16W	(D900)
R836	1-218-879-11	RES,CHIP	22K	0.50% 1/16W	(D900/D900E)
R837	1-216-841-11	METAL CHIP	47K	5% 1/16W	(D900/D900E)
R838	1-216-841-11	METAL CHIP	47K	5% 1/16W	(D900/D900E)
R839	1-218-879-11	RES,CHIP	22K	0.50% 1/16W	(D900/D900E)
R840	1-216-857-11	METAL CHIP	1M	5% 1/16W	(D900/D900E)
R841	1-216-831-11	METAL CHIP	6.8K	5% 1/16W	(D900E)
R842	1-216-841-11	METAL CHIP	47K	5% 1/16W	(D900/D900E)
R843	1-216-841-11	METAL CHIP	47K	5% 1/16W	(D900/D900E)
R845	1-216-841-11	METAL CHIP	47K	5% 1/16W	(D900E)
R846	1-216-837-11	METAL CHIP	22K	5% 1/16W	(D900/D900E)
R847	1-216-837-11	METAL CHIP	22K	5% 1/16W	(D900/D900E)
R848	1-216-817-11	METAL CHIP	470	5% 1/16W	(D900E)
R848	1-218-847-11	RES,CHIP	1K	0.50% 1/16W	(D900)
R849	1-216-864-11	METAL CHIP	0	5% 1/16W	(D900E)
R850	1-216-829-11	METAL CHIP	4.7K	5% 1/16W	(D900E)
R851	1-218-937-11	RES,CHIP	47	5% 1/16W	(D900/D900E)
R852	1-218-937-11	RES,CHIP	47	5% 1/16W	(D900/D900E)
R853	1-218-937-11	RES,CHIP	47	5% 1/16W	(D900/D900E)
R854	1-216-837-11	METAL CHIP	22K	5% 1/16W	(D900)
R855	1-218-964-11	RES,CHIP	8.2K	5% 1/16W	(D900/D900E)
R856	1-218-970-11	RES,CHIP	27	5% 1/16W	(D900)
R857	1-216-843-11	METAL CHIP	68K	5% 1/16W	(D900/D900E)
R858	1-216-830-11	METAL CHIP	5.6K	5% 1/16W	(D900/D900E)
R859	1-216-839-11	METAL CHIP	33K	5% 1/16W	(D900/D900E)
R860	1-218-885-11	RES,CHIP	39K	0.50% 1/16W	(D900/D900E)
R861	1-208-719-11	RES,CHIP	33K	0.50% 1/16W	(D900/D900E)
R862	1-218-891-11	RES,CHIP	68K	0.50% 1/16W	(D900/D900E)
R863	1-216-841-11	METAL CHIP	47K	5% 1/16W	(D900/D900E)
R865	1-218-877-11	RES,CHIP	18K	0.50% 1/16W	(D900/D900E)
R866	1-218-970-11	RES,CHIP	27K	0.50% 1/16W	(D900/D900E)
R869	1-216-841-11	METAL CHIP	47K	5% 1/16W	(D900/D900E)
R874	1-216-841-11	METAL CHIP	47K	5% 1/16W	(D900/D900E)
R875	1-216-839-11	METAL CHIP	33K	5% 1/16W	(D900/D900E)
R932	1-216-845-11	METAL CHIP	100K	5% 1/16W	(D900/D900E)
R933	1-218-887-11	RES,CHIP	47K	0.50% 1/16W	(D900/D900E)
R942	1-216-845-11	METAL CHIP	100K	5% 1/16W	(D900/D900E)
R943	1-216-845-11	METAL CHIP	100K	5% 1/16W	(D900/D900E)
R1102	1-218-990-11	SHORT	0		
R1104	1-218-961-11	RES,CHIP	4.7K	5% 1/16W	
R1105	1-218-990-11	SHORT	0		
R1106	1-218-990-11	SHORT	0		
R1107	1-218-947-11	RES,CHIP	330	5% 1/16W	
R1108	1-218-990-11	SHORT	0		
R1109	1-218-959-11	RES,CHIP	3.3K	5% 1/16W	
R1110	1-218-990-11	SHORT	0		
R1111	1-218-990-11	SHORT	0		
R1112	1-218-957-11	RES,CHIP	2.2K	5% 1/16W	
R1113	1-218-990-11	SHORT	0		
R1114	1-218-990-11	SHORT	0		
R1115	1-218-990-11	SHORT	0		
R1116	1-218-957-11	RES,CHIP	2.2K	5% 1/16W	
R1118	1-218-990-11	SHORT	0		
R1119	1-218-953-11	RES,CHIP	1K	5% 1/16W	
R1120	1-218-953-11	RES,CHIP	1K	5% 1/16W	
R1121	1-218-957-11	RES,CHIP	2.2K	5% 1/16W	
R1122	1-218-977-11	RES,CHIP	100K	5% 1/16W	
R1123	1-218-990-11	SHORT	0		
R1126	1-218-953-11	RES,CHIP	1K	5% 1/16W	
R1128	1-218-990-11	SHORT	0		
R1129	1-218-990-11	SHORT	0		
R1130	1-218-990-11	SHORT	0		
R1133	1-218-985-11	RES,CHIP	470K	5% 1/16W	
R1134	1-218-953-11	RES,CHIP	1K	5% 1/16W	
R1135	1-218-953-11	RES,CHIP	1K	5% 1/16W	
R1136	1-218-953-11	RES,CHIP	1K	5% 1/16W	
R1137	1-218-953-11	RES,CHIP	1K	5% 1/16W	
R1138	1-218-953-11	RES,CHIP	1K	5% 1/16W	

Ref. No.	Part No.	Description				Remarks
R1139	1-218-953-11	RES,CHIP		1K	5%	1/16W
R1140	1-218-977-11	RES,CHIP		100K	5%	1/16W
R1141	1-218-990-11	SHORT	0			
R1142	1-218-935-11	RES,CHIP		33	5%	1/16W
R1143	1-218-935-11	RES,CHIP		33	5%	1/16W
R1144	1-218-935-11	RES,CHIP		33	5%	1/16W
R1146	1-218-965-11	RES,CHIP		10K	5%	1/16W
R1147	1-218-936-11	RES,CHIP		39	5%	1/16W
R1148	1-218-936-11	RES,CHIP		39	5%	1/16W
R1149	1-218-936-11	RES,CHIP		39	5%	1/16W
R1152	1-218-965-11	RES,CHIP		10K	5%	1/16W
R1153	1-218-960-11	RES,CHIP		3.9K	5%	1/16W
R1158	1-218-953-11	RES,CHIP		1K	5%	1/16W
R1159	1-218-957-11	RES,CHIP		2.2K	5%	1/16W
R1160	1-218-957-11	RES,CHIP		2.2K	5%	1/16W
R1161	1-218-957-11	RES,CHIP		2.2K	5%	1/16W
R1162	1-218-972-11	RES,CHIP		39K	5%	1/16W
R1163	1-218-977-11	RES,CHIP		100K	5%	1/16W
R1164	1-208-715-11	RES,CHIP		22K	0.50%	1/16W
R1165	1-208-719-11	RES,CHIP		33K	0.50%	1/16W
R1166	1-218-985-11	RES,CHIP		470K	5%	1/16W
R1167	1-218-953-11	RES,CHIP		1K	5%	1/16W
R1171	1-218-947-11	RES,CHIP		330	5%	1/16W
R1172	1-218-947-11	RES,CHIP		330	5%	1/16W
R1173	1-164-943-11	CERAMIC CHIP		0.01MF	10%	16V
R1174	1-218-990-11	SHORT	0			
R1175	1-218-990-11	SHORT	0			
R1176	1-218-990-11	SHORT	0			
R1177	1-218-957-11	RES,CHIP		2.2K	5%	1/16W
R1178	1-218-957-11	RES,CHIP		2.2K	5%	1/16W
R1179	1-218-957-11	RES,CHIP		2.2K	5%	1/16W
R1180	1-218-957-11	RES,CHIP		2.2K	5%	1/16W
R1181	1-218-990-11	SHORT	0			
R1183	1-218-990-11	SHORT	0			
R1185	1-218-990-11	SHORT	0			
R1186	1-218-990-11	SHORT	0			
R1188	1-218-990-11	SHORT	0			
R1191	1-218-990-11	SHORT	0			
R1193	1-218-990-11	SHORT	0			
R1198	1-218-959-11	RES,CHIP		3.3K	5%	1/16W
R1199	1-218-971-11	RES,CHIP		33K	5%	1/16W (D300/D900/D900E)
R1199	1-218-990-11	SHORT	0	(D300E)		
R1200	1-218-953-11	RES,CHIP		1K	5%	1/16W
R1202	1-218-990-11	SHORT	0			
R1204	1-218-990-11	SHORT	0			
R1205	1-218-990-11	SHORT	0	(D300/D900)		
R1206	1-218-990-11	SHORT	0	(D300E/D900E)		
R1207	1-218-977-11	RES,CHIP		100K	5%	1/16W
R1208	1-218-977-11	RES,CHIP		100K	5%	1/16W
R1210	1-218-977-11	RES,CHIP		100K	5%	1/16W
R1211	1-218-953-11	RES,CHIP		1K	5%	1/16W
R1213	1-218-990-11	SHORT	0			
R1214	1-218-990-11	SHORT	0			
R1216	1-218-990-11	SHORT	0			
R1217	1-218-977-11	RES,CHIP		100K	5%	1/16W
R1218	1-218-977-11	RES,CHIP		100K	5%	1/16W

Ref. No.	Part No.	Description				Remarks
R1219	1-218-961-11	RES,CHIP		4.7K	5%	1/16W
R1220	1-218-990-11	SHORT	0			
R1221	1-208-707-11	RES,CHIP		10K	0.50%	1/16W
R1222	1-218-990-11	SHORT	0			
R1223	1-208-707-11	RES,CHIP		10K	0.50%	1/16W
R1224	1-218-990-11	SHORT	0			
R1225	1-208-707-11	RES,CHIP		10K	0.50%	1/16W
R1227	1-218-990-11	SHORT	0			
R1229	1-218-990-11	SHORT	0			
R1230	1-218-990-11	SHORT	0			
R1232	1-216-864-11	METAL CHIP		0	5%	1/16W
R1233	1-216-864-11	METAL CHIP		0	5%	1/16W
R1234	1-218-953-11	RES,CHIP		1K	5%	1/16W
R1235	1-218-990-11	SHORT	0	(D300E/D900E)		
R1236	1-218-990-11	SHORT	0	(D300/D900)		
R1237	1-218-990-11	SHORT	0	(D300E/D900E)		
R1238	1-218-990-11	SHORT	0	(D300/D900)		
R1239	1-218-990-11	SHORT	0	(D300/D300E/D900)		
R1240	1-218-990-11	SHORT	0			
R1241	1-218-990-11	SHORT	0	(D300E/D900E)		
R1242	1-218-990-11	SHORT	0	(D300/D900)		
R1243	1-218-949-11	RES,CHIP		470	5%	1/16W
R1244	1-218-967-11	RES,CHIP		15K	5%	1/16W
R1245	1-218-965-11	RES,CHIP		10K	5%	1/16W
R1246	1-218-949-11	RES,CHIP		470	5%	1/16W
R1247	1-218-967-11	RES,CHIP		15K	5%	1/16W
R1248	1-218-965-11	RES,CHIP		10K	5%	1/16W
R1249	1-218-990-11	SHORT	0			
R1254	1-218-965-11	RES,CHIP		10K	5%	1/16W
R1255	1-216-833-11	METAL CHIP		10K	5%	1/16W
R1256	1-218-967-11	RES,CHIP		15K	5%	1/16W
R1257	1-216-833-11	METAL CHIP		10K	5%	1/16W
R1258	1-216-864-11	METAL CHIP		0	5%	1/16W
R1259	1-218-941-11	RES,CHIP		100	5%	1/16W
R1260	1-218-941-11	RES,CHIP		100	5%	1/16W
R1261	1-218-941-11	RES,CHIP		100	5%	1/16W
R1262	1-218-973-11	RES,CHIP		47K	5%	1/16W
R1263	1-218-990-11	SHORT	0			
R1264	1-218-990-11	SHORT	0	(D300/D900)		
R1265	1-218-941-11	RES,CHIP		100	5%	1/16W
R1266	1-216-817-11	METAL CHIP		470	5%	1/16W
R1267	1-218-956-11	RES,CHIP		1.8K	5%	1/16W
R1268	1-218-973-11	RES,CHIP		47K	5%	1/16W
R1269	1-218-981-11	RES,CHIP		220K	5%	1/16W
R1270	1-218-990-11	SHORT	0			
R1271	1-218-953-11	RES,CHIP		1K	5%	1/16W
R1272	1-218-973-11	RES,CHIP		47K	5%	1/16W
R1273	1-218-953-11	RES,CHIP		1K	5%	1/16W
R1274	1-218-990-11	SHORT	0			
R1275	1-218-949-11	RES,CHIP		470	5%	1/16W
R1276	1-218-953-11	RES,CHIP		1K	5%	1/16W
R1277	1-218-953-11	RES,CHIP		1K	5%	1/16W
R1278	1-218-953-11	RES,CHIP		1K	5%	1/16W
R1279	1-218-990-11	SHORT	0			
R1280	1-218-949-11	RES,CHIP		470	5%	1/16W

CB-61

Ref. No.	Part No.	Description			Remarks
R1281	1-216-825-11	METAL CHIP	2.2K	5%	1/16W
R1282	1-218-990-11	SHORT	0	(D900E)	
R1283	1-218-953-11	RES,CHIP	1K	5%	1/16W
R1284	1-216-843-11	METAL CHIP	68K	5%	1/16W
R1285	1-216-842-11	METAL CHIP	56K	5%	1/16W
R1286	1-216-817-11	METAL CHIP	470	5%	1/16W
R1287	1-218-956-11	RES,CHIP	1.8K	5%	1/16W
R1288	1-218-973-11	RES,CHIP	47K	5%	1/16W
R1289	1-216-842-11	METAL CHIP	56K	5%	1/16W
R1290	1-216-843-11	METAL CHIP	68K	5%	1/16W
R1291	1-216-825-11	METAL CHIP	2.2K	5%	1/16W
R1292	1-218-953-11	RES,CHIP	1K	5%	1/16W
R2302	1-218-934-11	RES,CHIP	27	5%	1/16W
R2303	1-208-927-11	RES,CHIP	47K	0.50%	1/16W
R2304	1-218-989-11	RES,CHIP	1M	5%	1/16W
R2305	1-218-985-11	RES,CHIP	470K	5%	1/16W
R2306	1-218-985-11	RES,CHIP	470K	5%	1/16W
R2307	1-218-985-11	RES,CHIP	470K	5%	1/16W
R2308	1-218-959-11	RES,CHIP	3.3K	5%	1/16W
R2309	1-218-959-11	RES,CHIP	3.3K	5%	1/16W
R2310	1-218-959-11	RES,CHIP	3.3K	5%	1/16W
R2311	1-218-941-11	RES,CHIP	100	5%	1/16W
R2312	1-218-941-11	RES,CHIP	100	5%	1/16W
R2313	1-218-985-11	RES,CHIP	470K	5%	1/16W
R2314	1-218-985-11	RES,CHIP	470K	5%	1/16W
R2315	1-218-985-11	RES,CHIP	470K	5%	1/16W
R2316	1-218-985-11	RES,CHIP	470K	5%	1/16W
R2317	1-218-985-11	RES,CHIP	470K	5%	1/16W
R2318	1-216-864-11	METAL CHIP	0	5%	1/16W
R2319	1-218-953-11	RES,CHIP	1K	5%	1/16W
R2320	1-208-707-11	RES,CHIP	10K	0.50%	1/16W
R2321	1-218-977-11	RES,CHIP	100K	5%	1/16W
R2325	1-218-955-11	RES,CHIP	1.5K	5%	1/16W
R2326	1-218-961-11	RES,CHIP	4.7K	5%	1/16W
R2327	1-216-791-11	METAL CHIP	3.3	5%	1/16W
R2328	1-218-962-11	RES,CHIP	5.6K	5%	1/16W
R2329	1-218-957-11	RES,CHIP	2.2K	5%	1/16W
R2332	1-218-953-11	RES,CHIP	1K	5%	1/16W
R2333	1-218-953-11	RES,CHIP	1K	5%	1/16W
R2334	1-208-927-11	RES,CHIP	47K	0.50%	1/16W
R2335	1-208-927-11	RES,CHIP	47K	0.50%	1/16W
R2336	1-208-927-11	RES,CHIP	47K	0.50%	1/16W
R2337	1-218-977-11	RES,CHIP	100K	5%	1/16W
R2338	1-218-945-11	RES,CHIP	220	5%	1/16W
R2339	1-208-707-11	RES,CHIP	10K	0.50%	1/16W
R2340	1-218-989-11	RES,CHIP	1M	5%	1/16W
R2341	1-218-989-11	RES,CHIP	1M	5%	1/16W
R2342	1-218-989-11	RES,CHIP	1M	5%	1/16W
R2343	1-208-707-11	RES,CHIP	10K	0.50%	1/16W
R2344	1-208-707-11	RES,CHIP	10K	0.50%	1/16W
R2345	1-208-707-11	RES,CHIP	10K	0.50%	1/16W
R2346	1-208-707-11	RES,CHIP	10K	0.50%	1/16W
R2347	1-218-953-11	RES,CHIP	1K	5%	1/16W
R2348	1-218-953-11	RES,CHIP	1K	5%	1/16W
R2349	1-218-953-11	RES,CHIP	1K	5%	1/16W
R2350	1-218-953-11	RES,CHIP	1K	5%	1/16W
R2351	1-218-953-11	RES,CHIP	1K	5%	1/16W
R2353	1-218-953-11	RES,CHIP	1K	5%	1/16W
R2354	1-208-927-11	RES,CHIP	47K	0.50%	1/16W
R2355	1-218-977-11	RES,CHIP	100K	5%	1/16W

Ref. No.	Part No.	Description			Remarks
R2356	1-218-977-11	RES,CHIP	100K	5%	1/16W
R2357	1-218-953-11	RES,CHIP	1K	5%	1/16W
R2358	1-218-953-11	RES,CHIP	1K	5%	1/16W
R2359	1-219-570-11	RES,CHIP	10M	5%	1/16W
R2360	1-218-949-11	RES,CHIP	470	5%	1/16W
R2361	1-218-977-11	RES,CHIP	100K	5%	1/16W
R2362	1-218-990-11	SHORT	0		
R2363	1-218-977-11	RES,CHIP	100K	5%	1/16W
R2364	1-218-977-11	RES,CHIP	100K	5%	1/16W
R2365	1-218-985-11	RES,CHIP	470K	5%	1/16W
R2366	1-208-707-11	RES,CHIP	10K	0.50%	1/16W
R2367	1-218-985-11	RES,CHIP	470K	5%	1/16W
R2368	1-218-958-11	RES,CHIP	2.7K	5%	1/16W
R2369	1-218-981-11	RES,CHIP	220K	5%	1/16W
R2379	1-218-977-11	RES,CHIP	100K	5%	1/16W
R2380	1-218-953-11	RES,CHIP	1K	5%	1/16W
R2381	1-218-981-11	RES,CHIP	220K	5%	1/16W
R2382	1-208-927-11	RES,CHIP	47K	0.50%	1/16W
R2383	1-208-927-11	RES,CHIP	47K	0.50%	1/16W
R2386	1-218-977-11	RES,CHIP	100K	5%	1/16W
R2387	1-218-977-11	RES,CHIP	100K	5%	1/16W
R2388	1-208-707-11	RES,CHIP	10K	0.50%	1/16W
R2390	1-218-977-11	RES,CHIP	100K	5%	1/16W
R2391	1-218-953-11	RES,CHIP	1K	5%	1/16W
R2392	1-218-953-11	RES,CHIP	1K	5%	1/16W
R3900	1-218-974-11	RES,CHIP	56K	5%	1/16W
R3901	1-208-719-11	RES,CHIP	33K	0.50%	1/16W
R3903	1-218-977-11	RES,CHIP	100K	5%	1/16W
R3904	1-216-864-11	METAL CHIP	0	5%	1/16W
R3905	1-218-879-11	RES,CHIP	22K	0.50%	1/16W
R3906	1-218-871-11	RES,CHIP	10K	0.50%	1/16W
R3907	1-218-990-11	SHORT	0		
R3908	1-218-945-11	RES,CHIP	220	0.50%	1/16W
R3909	1-208-711-11	RES,CHIP	15K	0.50%	1/16W
R3910	1-218-875-11	RES,CHIP	15K	0.50%	1/16W
R3911	1-218-875-11	RES,CHIP	15K	0.50%	1/16W
R3912	1-218-959-11	RES,CHIP	3.3K	5%	1/16W
R3913	1-218-879-11	RES,CHIP	22K	0.50%	1/16W
R3914	1-218-879-11	RES,CHIP	22K	0.50%	1/16W
R3915	1-218-855-11	RES,CHIP	2.2K	0.50%	1/16W (D900/D900E)
R3916	1-218-961-11	RES,CHIP	4.7K	5%	1/16W
R3917	1-218-871-11	RES,CHIP	10K	0.50%	1/16W
R3918	1-208-927-11	RES,CHIP	47K	0.50%	1/16W
R3919	1-218-879-11	RES,CHIP	22K	0.50%	1/16W
R3920	1-208-703-11	RES,CHIP	6.8K	0.50%	1/16W
R3921	1-218-871-11	RES,CHIP	10K	0.50%	1/16W
R3922	1-218-959-11	RES,CHIP	3.3K	5%	1/16W
R3923	1-218-875-11	RES,CHIP	15K	0.50%	1/16W
R3924	1-216-841-11	METAL CHIP	47K	5%	1/16W
R3925	1-208-703-11	RES,CHIP	6.8K	0.50%	1/16W
R3926	1-218-875-11	RES,CHIP	15K	0.50%	1/16W
R3927	1-218-877-11	RES,CHIP	18K	0.50%	1/16W
R3928	1-218-879-11	RES,CHIP	22K	0.50%	1/16W
R3929	1-218-855-11	RES,CHIP	2.2K	0.50%	1/16W
R3930	1-218-877-11	RES,CHIP	18K	0.50%	1/16W
R3931	1-208-713-11	RES,CHIP	18K	0.50%	1/16W
R3933	1-216-864-11	METAL CHIP	0	5%	1/16W
R3934	1-218-877-11	RES,CHIP	18K	0.50%	1/16W
R3935	1-218-845-11	RES,CHIP	820	0.50%	1/16W
R3936	1-218-965-11	RES,CHIP	10K	5%	1/16W

Ref. No.	Part No.	Description			Remarks
R3938	1-216-845-11	METAL CHIP	100K	5%	1/16W
R3939	1-216-857-11	METAL CHIP	1M	5%	1/16W
R3940	1-218-855-11	RES,CHIP	2.2K	0.50%	1/16W
R3941	1-216-841-11	METAL CHIP	47K	5%	1/16W (D900/D900E)
R3943	1-216-844-11	METAL CHIP	82K	5%	1/16W (D900/D900E)
R3944	1-218-871-11	RES,CHIP	10K	0.50%	1/16W
R3945	1-218-878-11	RES,CHIP	20K	0.50%	1/16W
R3946	1-216-841-11	METAL CHIP	47K	5%	1/16W
R3947	1-216-819-11	METAL CHIP	680	5%	1/16W
R3948	1-216-833-11	METAL CHIP	10K	5%	1/16W
R3950	1-216-843-11	METAL CHIP	68K	5%	1/16W (D900/D900E)
R3951	1-208-719-11	RES,CHIP	33K	0.50%	1/16W
R3952	1-218-879-11	RES,CHIP	22K	0.50%	1/16W
R3953	1-216-841-11	METAL CHIP	47K	5%	1/16W (D900/D900E)
R3954	1-216-809-11	METAL CHIP	100	5%	1/16W (D900/D900E)
R3955	1-218-977-11	RES,CHIP	100K	5%	1/16W (D900/D900E)
R3956	1-218-989-11	RES,CHIP	1M	5%	1/16W (D900/D900E)
R3957	1-216-295-91	SHORT	0		
R3958	1-216-138-00	METAL CHIP	3.3	5%	1/8W
R3959	1-216-820-11	METAL CHIP	820	5%	1/16W
R3960	1-218-877-11	RES,CHIP	18K	0.50%	1/16W
R3961	1-218-962-11	RES,CHIP	5.6K	5%	1/16W
R3962	1-216-841-11	METAL CHIP	47K	5%	1/16W (D900/D900E)
R3963	1-216-841-11	METAL CHIP	47K	5%	1/16W (D900/D900E)
R3964	1-216-841-11	METAL CHIP	47K	5%	1/16W
R3966	1-218-855-11	RES,CHIP	2.2K	0.50%	1/16W (D900/D900E)
R3967	1-216-841-11	METAL CHIP	47K	5%	1/16W
R3968	1-218-895-11	RES,CHIP	100K	0.50%	1/16W (D900/D900E)
R3969	1-218-885-11	RES,CHIP	39K	0.50%	1/16W (D900/D900E)
R3970	1-218-885-11	RES,CHIP	39K	0.50%	1/16W (D900/D900E)
R3971	1-216-864-11	METAL CHIP	0	5%	1/16W (D300/D300E)
R3972	1-218-985-11	RES,CHIP	470K	5%	1/16W (D900/D900E)
R3973	1-216-841-11	METAL CHIP	47K	5%	1/16W (D900/D900E)
R3974	1-216-803-11	METAL CHIP	33	5%	1/16W (D900)
R3974	1-216-805-11	METAL CHIP	47	5%	1/16W (D900E)
R3975	1-218-989-11	RES,CHIP	1M	5%	1/16W (D900/D900E)
R3976	1-216-841-11	METAL CHIP	47K	5%	1/16W (D900/D900E)
R3977	1-218-985-11	RES,CHIP	470K	5%	1/16W (D900/D900E)
R3978	1-218-977-11	RES,CHIP	100K	5%	1/16W (D900/D900E)
R3979	1-216-864-11	METAL CHIP	0	5%	1/16W (D900/D900E)
R3981	1-216-853-11	METAL CHIP	470K	5%	1/16W
R3982	1-216-845-11	METAL CHIP	100K	5%	1/16W
R3983	1-216-845-11	METAL CHIP	100K	5%	1/16W
R3984	1-216-845-11	METAL CHIP	100K	5%	1/16W
R3986	1-216-837-11	METAL CHIP	22K	5%	1/16W
R3989	1-216-864-11	METAL CHIP	0	5%	1/16W
R3991	1-216-864-11	METAL CHIP	0	5%	1/16W
R3993	1-218-965-11	RES,CHIP	10K	5%	1/16W (D900/D900E)
R3994	1-216-820-11	METAL CHIP	820	5%	1/16W
R3995	1-216-833-11	METAL CHIP	10K	5%	1/16W
R3996	1-216-835-11	METAL CHIP	15K	5%	1/16W
R3997	1-216-138-00	METAL CHIP	3.3	5%	1/8W
R3998	1-216-827-11	METAL CHIP	3.3K	5%	1/16W
R7501	1-208-927-11	RES,CHIP	47K	0.50%	1/16W
R7502	1-218-956-11	RES,CHIP	1.8K	5%	1/16W
R7503	1-208-719-11	RES,CHIP	33K	0.50%	1/16W
R7504	1-208-719-11	RES,CHIP	33K	0.50%	1/16W
R7505	1-208-707-11	RES,CHIP	10K	0.50%	1/16W
R7506	1-218-990-11	SHORT	0		
R7507	1-216-861-11	METAL CHIP	2.2M	5%	1/16W
R7508	1-218-933-11	RES,CHIP	22	5%	1/16W
R7509	1-208-707-11	RES,CHIP	10K	0.50%	1/16W
R7510	1-208-707-11	RES,CHIP	10K	0.50%	1/16W
R7511	1-218-953-11	RES,CHIP	1K	5%	1/16W
R7512	1-208-707-11	RES,CHIP	10K	0.50%	1/16W
R7513	1-218-977-11	RES,CHIP	100K	5%	1/16W
R7514	1-218-984-11	RES,CHIP	390K	5%	1/16W
R7515	1-218-949-11	RES,CHIP	470	5%	1/16W
R7516	1-218-977-11	RES,CHIP	100K	5%	1/16W
R7517	1-218-977-11	RES,CHIP	100K	5%	1/16W
R7518	1-218-949-11	RES,CHIP	470	5%	1/16W
R7519	1-218-949-11	RES,CHIP	470	5%	1/16W
R7520	1-218-949-11	RES,CHIP	470	5%	1/16W
R7521	1-218-949-11	RES,CHIP	470	5%	1/16W
R7522	1-218-949-11	RES,CHIP	470	5%	1/16W
R7523	1-218-949-11	RES,CHIP	470	5%	1/16W
R7524	1-218-949-11	RES,CHIP	470	5%	1/16W
R7525	1-208-711-11	RES,CHIP	15K	0.50%	1/16W
R7526	1-208-707-11	RES,CHIP	10K	0.50%	1/16W
R7527	1-218-977-11	RES,CHIP	100K	5%	1/16W
R7528	1-218-977-11	RES,CHIP	100K	5%	1/16W
R7531	1-208-927-11	RES,CHIP	47K	0.50%	1/16W
R7532	1-208-927-11	RES,CHIP	47K	0.50%	1/16W
R7533	1-218-929-11	RES,CHIP	10	5%	1/16W
R7534	1-208-707-11	RES,CHIP	10K	0.50%	1/16W
R7535	1-208-707-11	RES,CHIP	10K	0.50%	1/16W
R7536	1-208-715-11	RES,CHIP	22K	0.50%	1/16W
R7537	1-208-715-11	RES,CHIP	22K	0.50%	1/16W
R7538	1-208-715-11	RES,CHIP	22K	0.50%	1/16W
R7539	1-208-715-11	RES,CHIP	22K	0.50%	1/16W
R7540	1-218-949-11	RES,CHIP	470	5%	1/16W
R7541	1-208-715-11	RES,CHIP	22K	0.50%	1/16W
R7542	1-208-715-11	RES,CHIP	22K	0.50%	1/16W
R7543	1-208-715-11	RES,CHIP	22K	0.50%	1/16W
R7544	1-208-715-11	RES,CHIP	22K	0.50%	1/16W
R7545	1-218-974-11	RES,CHIP	56K	5%	1/16W
R7546	1-218-974-11	RES,CHIP	56K	5%	1/16W
R7547	1-218-974-11	RES,CHIP	56K	5%	1/16W

CB-61

Ref. No.	Part No.	Description				Remarks
R7548	1-218-974-11	RES,CHIP		56K	5%	1/16W
R7549	1-208-715-11	RES,CHIP		22K	0.50%	1/16W
R7550	1-208-715-11	RES,CHIP		22K	0.50%	1/16W
R7551	1-218-949-11	RES,CHIP		470	5%	1/16W
R7552	1-208-715-11	RES,CHIP		22K	0.50%	1/16W
R7553	1-208-715-11	RES,CHIP		22K	0.50%	1/16W
R7554	1-218-985-11	RES,CHIP		470K	5%	1/16W
R7555	1-218-985-11	RES,CHIP		470K	5%	1/16W
R7556	1-208-715-11	RES,CHIP		22K	0.50%	1/16W
R7557	1-208-715-11	RES,CHIP		22K	0.50%	1/16W
R7558	1-208-719-11	RES,CHIP		33K	0.50%	1/16W
R7559	1-208-719-11	RES,CHIP		33K	0.50%	1/16W
R7560	1-208-707-11	RES,CHIP		10K	0.50%	1/16W
R7561	1-208-707-11	RES,CHIP		10K	0.50%	1/16W
R7562	1-218-953-11	RES,CHIP		1K	5%	1/16W
R7563	1-218-953-11	RES,CHIP		1K	5%	1/16W
R7564	1-218-985-11	RES,CHIP		470K	5%	1/16W
R7565	1-218-985-11	RES,CHIP		470K	5%	1/16W
R7566	1-208-707-11	RES,CHIP		10K	0.50%	1/16W
R7567	1-218-945-11	RES,CHIP		220	5%	1/16W
R7568	1-218-945-11	RES,CHIP		220	5%	1/16W
R7569	1-218-990-11	SHORT	0			
R7571	1-218-970-11	RES,CHIP		27K	5%	1/16W
R7572	1-216-861-11	METAL CHIP		2.2M	5%	1/16W
R7573	1-218-990-11	SHORT	0			
R7575	1-218-990-11	SHORT	0			
R7579	1-208-707-11	RES,CHIP		10K	0.50%	1/16W
R7580	1-208-707-11	RES,CHIP		10K	0.50%	1/16W
R7581	1-208-707-11	RES,CHIP		10K	0.50%	1/16W
R7582	1-208-711-11	RES,CHIP		15K	0.50%	1/16W
R7583	1-208-707-11	RES,CHIP		10K	0.50%	1/16W
R7584	1-218-977-11	RES,CHIP		100K	5%	1/16W
R7585	1-218-977-11	RES,CHIP		100K	5%	1/16W
R7587	1-218-949-11	RES,CHIP		470	5%	1/16W
R7588	1-218-949-11	RES,CHIP		470	5%	1/16W
R7589	1-218-949-11	RES,CHIP		470	5%	1/16W
R7590	1-218-949-11	RES,CHIP		470	5%	1/16W
R7591	1-208-927-11	RES,CHIP		47K	0.50%	1/16W
R7592	1-218-977-11	RES,CHIP		100K	5%	1/16W
R7593	1-218-977-11	RES,CHIP		100K	5%	1/16W
R7594	1-208-707-11	RES,CHIP		10K	0.50%	1/16W
R7801	1-208-927-11	RES,CHIP		47K	0.50%	1/16W
R7802	1-208-927-11	RES,CHIP		47K	0.50%	1/16W
R7803	1-218-990-11	SHORT	0			
R7805	1-218-990-11	SHORT	0			
R7807	1-218-958-11	RES,CHIP		2.7K	5%	1/16W
R7808	1-218-967-11	RES,CHIP		15K	5%	1/16W (D300/D300E)
R7808	1-218-981-11	RES,CHIP		220K	5%	1/16W (D900/D900E)
R7812	1-218-964-11	RES,CHIP		8.2K	5%	1/16W
R7813	1-218-957-11	RES,CHIP		2.2K	5%	1/16W
R7814	1-220-175-11	RES,CHIP		240	5%	1/16W
R7815	1-218-964-11	RES,CHIP		8.2K	5%	1/16W
R7816	1-218-957-11	RES,CHIP		2.2K	5%	1/16W

Ref. No.	Part No.	Description				Remarks
R7817	1-220-175-11	RES,CHIP		240	5%	1/16W
R7818	1-218-966-11	RES,CHIP		12K	5%	1/16W (D900/D900E)
R7819	1-218-968-11	RES,CHIP		18K	5%	1/16W (D900/D900E)
R7820	1-218-966-11	RES,CHIP		12K	5%	1/16W (D900/D900E)
R7821	1-218-966-11	RES,CHIP		12K	5%	1/16W (D900/D900E)
R7828	1-218-941-11	RES,CHIP		100	5%	1/16W
R7829	1-218-941-11	RES,CHIP		100	5%	1/16W
R7830	1-218-953-11	RES,CHIP		1K	5%	1/16W
R7831	1-218-953-11	RES,CHIP		1K	5%	1/16W
R7832	1-218-977-11	RES,CHIP		100K	5%	1/16W
R7836	1-218-977-11	RES,CHIP		100K	5%	1/16W
R7837	1-218-977-11	RES,CHIP		100K	5%	1/16W
R8002	1-218-977-11	RES,CHIP		100K	5%	1/16W
R8003	1-218-977-11	RES,CHIP		100K	5%	1/16W
R8004	1-218-977-11	RES,CHIP		100K	5%	1/16W
R8005	1-218-977-11	RES,CHIP		100K	5%	1/16W
R8007	1-218-977-11	RES,CHIP		100K	5%	1/16W
R8008	1-218-977-11	RES,CHIP		100K	5%	1/16W
R8009	1-218-977-11	RES,CHIP		100K	5%	1/16W
R8010	1-218-990-11	SHORT	0			
R8401	1-218-973-11	RES,CHIP		47K	5%	1/16W
R8402	1-218-990-11	SHORT	0			
R8403	1-218-973-11	RES,CHIP		47K	5%	1/16W
R8405	1-218-967-11	RES,CHIP		15K	5%	1/16W
R8406	1-218-967-11	RES,CHIP		15K	5%	1/16W
R8407	1-218-989-11	RES,CHIP		1M	5%	1/16W
R8408	1-218-972-11	RES,CHIP		39K	5%	1/16W
R8409	1-208-715-11	RES,CHIP		22K	0.50%	1/16W
R8410	1-218-947-11	RES,CHIP		330	5%	1/16W
R8411	1-218-953-11	RES,CHIP		1K	5%	1/16W
R8412	1-218-990-11	SHORT	0	(D300E/D900E)		
R8413	1-218-949-11	RES,CHIP		470	5%	1/16W
R8414	1-218-953-11	RES,CHIP		1K	5%	1/16W
R8415	1-218-950-11	RES,CHIP		560	5%	1/16W
R8416	1-218-963-11	RES,CHIP		6.8K	5%	1/16W
R8417	1-218-949-11	RES,CHIP		470	5%	1/16W
R8418	1-218-949-11	RES,CHIP		470	5%	1/16W
R8419	1-218-953-11	RES,CHIP		1K	5%	1/16W
R8421	1-218-990-11	SHORT	0			
R8422	1-218-957-11	RES,CHIP		2.2K	5%	1/16W
R8423	1-218-979-11	RES,CHIP		150K	5%	1/16W
R8424	1-218-979-11	RES,CHIP		150K	5%	1/16W
R8425	1-218-961-11	RES,CHIP		4.7K	5%	1/16W
R8428	1-216-817-11	METAL CHIP		470	5%	1/16W
R8429	1-218-966-11	RES,CHIP		12K	5%	1/16W
R8430	1-218-961-11	RES,CHIP		4.7K	5%	1/16W
R8431	1-218-961-11	RES,CHIP		4.7K	5%	1/16W
R8432	1-218-964-11	RES,CHIP		8.2K	5%	1/16W
R8435	1-218-955-11	RES,CHIP		1.5K	5%	1/16W
R8438	1-218-990-11	SHORT	0			
R8439	1-218-960-11	RES,CHIP		3.9K	5%	1/16W
R8440	1-218-947-11	RES,CHIP		330	5%	1/16W
R9002	1-218-966-11	RES,CHIP		12K	5%	1/16W
R9004	1-218-948-11	RES,CHIP		390	5%	1/16W
R9005	1-218-953-11	RES,CHIP		1K	5%	1/16W

Ref. No.	Part No.	Description			Remarks
R9006	1-208-707-11	RES,CHIP	10K	0.50%	1/16W
R9007	1-218-964-11	RES,CHIP	8.2K	5%	1/16W
R9008	1-218-953-11	RES,CHIP	1K	5%	1/16W
R9009	1-208-707-11	RES,CHIP	10K	0.50%	1/16W
R9010	1-218-968-11	RES,CHIP	18K	5%	1/16W
R9011	1-218-980-11	RES,CHIP	180K	5%	1/16W
R9013	1-218-935-11	RES,CHIP	33	5%	1/16W
R9014	1-218-946-11	RES,CHIP	270	5%	1/16W
R9015	1-218-944-11	RES,CHIP	180	5%	1/16W
R9018	1-218-950-11	RES,CHIP	560	5%	1/16W
R9019	1-218-945-11	RES,CHIP	220	5%	1/16W
R9020	1-218-966-11	RES,CHIP	12K	5%	1/16W
R9021	1-218-953-11	RES,CHIP	1K	5%	1/16W
R9022	1-218-952-11	RES,CHIP	820	5%	1/16W
R9023	1-218-990-11	SHORT	0		
R9024	1-218-969-11	RES,CHIP	22K	5%	1/16W
R9025	1-218-968-11	RES,CHIP	18K	5%	1/16W
R9026	1-218-949-11	RES,CHIP	470	5%	1/16W
R9027	1-208-715-11	RES,CHIP	22K	0.50%	1/16W
R9028	1-218-981-11	RES,CHIP	220K	5%	1/16W
R9029	1-218-956-11	RES,CHIP	1.8K	5%	1/16W
R9030	1-218-960-11	RES,CHIP	3.9K	5%	1/16W
R9031	1-218-977-11	RES,CHIP	100K	5%	1/16W
R9032	1-218-956-11	RES,CHIP	1.8K	5%	1/16W
R9033	1-220-215-11	RES,CHIP	510K	5%	1/16W
R9034	1-208-707-11	RES,CHIP	10K	0.50%	1/16W
R9035	1-218-945-11	RES,CHIP	220	5%	1/16W
R9036	1-218-953-11	RES,CHIP	1K	5%	1/16W
R9037	1-218-945-11	RES,CHIP	220	5%	1/16W
R9038	1-218-957-11	RES,CHIP	2.2K	5%	1/16W
R9039	1-218-953-11	RES,CHIP	1K	5%	1/16W
R9041	1-208-711-11	RES,CHIP	15K	0.50%	1/16W (D300E/D900E)
R9042	1-218-963-11	RES,CHIP	6.8K	5%	1/16W
R9043	1-218-957-11	RES,CHIP	2.2K	5%	1/16W
R9044	1-218-963-11	RES,CHIP	6.8K	5%	1/16W
R9045	1-218-957-11	RES,CHIP	2.2K	5%	1/16W
R9046	1-218-969-11	RES,CHIP	22K	5%	1/16W
R9047	1-218-965-11	RES,CHIP	10K	5%	1/16W
R9049	1-218-949-11	RES,CHIP	470	5%	1/16W (D300/D300E/D900E)
R9049	1-218-950-11	RES,CHIP	560	5%	1/16W (D900)
R9050	1-218-948-11	RES,CHIP	390	5%	1/16W
R9051	1-218-990-11	SHORT	0 (D300/D900)		
R9051	1-218-966-11	RES,CHIP	12K	5%	1/16W (D300E/D900E)
R9052	1-218-990-11	SHORT	0		
R9054	1-218-957-11	RES,CHIP	2.2K	5%	1/16W
R9055	1-218-957-11	RES,CHIP	2.2K	5%	1/16W
R9056	1-218-953-11	RES,CHIP	1K	5%	1/16W
R9057	1-218-953-11	RES,CHIP	1K	5%	1/16W
R9058	1-218-953-11	RES,CHIP	1K	5%	1/16W
R9059	1-218-977-11	RES,CHIP	100K	5%	1/16W
R9060	1-218-965-11	RES,CHIP	10K	5%	1/16W (D300/D900)
R9061	1-218-965-11	RES,CHIP	10K	5%	1/16W
R9062	1-218-985-11	RES,CHIP	470K	5%	1/16W
R9063	1-218-949-11	RES,CHIP	470	5%	1/16W
R9064	1-218-953-11	RES,CHIP	1K	5%	1/16W

Ref. No.	Part No.	Description			Remarks
R9065	1-218-965-11	RES,CHIP	10K	5%	1/16W (D300E/D900E)
R9066	1-218-985-11	RES,CHIP	470K	5%	1/16W
R9067	1-218-985-11	RES,CHIP	470K	5%	1/16W
R9068	1-218-957-11	RES,CHIP	2.2K	5%	1/16W
R9070	1-218-953-11	RES,CHIP	1K	5%	1/16W
R9071	1-218-961-11	RES,CHIP	4.7K	5%	1/16W
R9072	1-218-945-11	RES,CHIP	220	5%	1/16W
R9073	1-218-961-11	RES,CHIP	4.7K	5%	1/16W
R9074	1-218-985-11	RES,CHIP	470K	5%	1/16W
R9075	1-218-985-11	RES,CHIP	470K	5%	1/16W
R9076	1-218-961-11	RES,CHIP	4.7K	5%	1/16W
R9077	1-218-945-11	RES,CHIP	220	5%	1/16W
R9078	1-218-961-11	RES,CHIP	4.7K	5%	1/16W
R9079	1-218-941-11	RES,CHIP	100	5%	1/16W
R9080	1-218-941-11	RES,CHIP	100	5%	1/16W
R9081	1-218-985-11	RES,CHIP	470K	5%	1/16W
R9083	1-218-987-11	RES,CHIP	680K	5%	1/16W
R9084	1-218-970-11	RES,CHIP	27K	5%	1/16W
R9085	1-218-990-11	SHORT	0		
R9087	1-218-971-11	RES,CHIP	33K	5%	1/16W
R9088	1-218-953-11	RES,CHIP	1K	5%	1/16W
R9089	1-218-971-11	RES,CHIP	33K	5%	1/16W
R9090	1-218-971-11	RES,CHIP	33K	5%	1/16W
R9091	1-218-965-11	RES,CHIP	10K	5%	1/16W
R9094	1-218-941-11	RES,CHIP	100	5%	1/16W
R9095	1-218-969-11	RES,CHIP	22K	5%	1/16W
R9097	1-218-973-11	RES,CHIP	47K	5%	1/16W
R9099	1-218-990-11	SHORT	0		
R9100	1-218-961-11	RES,CHIP	4.7K	5%	1/16W
R9101	1-218-961-11	RES,CHIP	4.7K	5%	1/16W
R9103	1-218-990-11	SHORT	0		
R9104	1-218-976-11	RES,CHIP	82K	5%	1/16W
R9105	1-218-976-11	RES,CHIP	82K	5%	1/16W
R9106	1-218-961-11	RES,CHIP	4.7K	5%	1/16W
R9107	1-218-965-11	RES,CHIP	10K	5%	1/16W
R9108	1-218-957-11	RES,CHIP	2.2K	5%	1/16W
R9109	1-218-969-11	RES,CHIP	22K	5%	1/16W
R9110	1-218-966-11	RES,CHIP	12K	5%	1/16W
R9111	1-218-947-11	RES,CHIP	330	5%	1/16W
R9112	1-218-973-11	RES,CHIP	47K	5%	1/16W
R9113	1-218-953-11	RES,CHIP	1K	5%	1/16W
R9114	1-218-973-11	RES,CHIP	47K	5%	1/16W
R9121	1-218-990-11	SHORT	0		
R9122	1-218-945-11	RES,CHIP	220	5%	1/16W
R9127	1-218-990-11	SHORT	0		
R9128	1-218-990-11	SHORT	0		
R9129	1-218-973-11	RES,CHIP	47K	5%	1/16W
R9130	1-218-953-11	RES,CHIP	1K	5%	1/16W
R9131	1-218-973-11	RES,CHIP	47K	5%	1/16W
R9132	1-218-947-11	RES,CHIP	330	5%	1/16W
R9133	1-218-953-11	RES,CHIP	1K	5%	1/16W
R9150	1-218-990-11	SHORT	0		
R9151	1-218-990-11	SHORT	0		
R9401	1-218-937-11	RES,CHIP	47	5%	1/16W
R9402	1-218-941-11	RES,CHIP	100	5%	1/16W

CB-61 **EX-34**

Ref. No.	Part No.	Description				Remarks
R9403	1-208-927-11	RES,CHIP	47K	0.50%	1/16W	
R9404	1-208-707-11	RES,CHIP	10K	0.50%	1/16W	
R9405	1-218-981-11	RES,CHIP	220K	5%	1/16W	
R9406	1-208-707-11	RES,CHIP	10K	0.50%	1/16W	
						(D300/D900)
R9407	1-218-965-11	RES,CHIP	10K	5%	1/16W	
						(D300E/D900E)
R9408	1-218-957-11	RES,CHIP	2.2K	5%	1/16W	
R9409	1-218-957-11	RES,CHIP	2.2K	5%	1/16W	
R9410	1-218-951-11	RES,CHIP	680	5%	1/16W	
R9411	1-218-947-11	RES,CHIP	330	5%	1/16W	
R9412	1-218-942-11	RES,CHIP	120	5%	1/16W	
R9413	1-218-957-11	RES,CHIP	2.2K	5%	1/16W	
R9414	1-218-990-11	SHORT	0			
R9501	1-218-985-11	RES,CHIP	470K	5%	1/16W	
R9502	1-218-953-11	RES,CHIP	1K	5%	1/16W	
R9503	1-218-953-11	RES,CHIP	1K	5%	1/16W	
R9504	1-218-947-11	RES,CHIP	330	5%	1/16W	
R9505	1-218-957-11	RES,CHIP	2.2K	5%	1/16W	
R9506	1-218-957-11	RES,CHIP	2.2K	5%	1/16W	
R9507	1-218-953-11	RES,CHIP	1K	5%	1/16W	
R9508	1-218-977-11	RES,CHIP	100K	5%	1/16W	
R9519	1-218-953-11	RES,CHIP	1K	5%	1/16W	
R9520	1-218-990-11	SHORT	0			
R9521	1-208-707-11	RES,CHIP	10K	0.50%	1/16W	
R9924	1-216-311-00	METAL CHIP	6.8	5%	1/10W	
R9925	1-216-089-91	RES,CHIP	47K	5%	1/10W	
R9926	1-216-049-91	RES,CHIP	1K	5%	1/10W	
R9928	1-218-990-11	SHORT	0			
R9929	1-218-990-11	SHORT	0	(D300E)		
R9930	1-218-990-11	SHORT	0	(D300E)		
R9931	1-218-990-11	SHORT	0	(D300E)		
		< VARIABLE RESISTOR >				
RV1200	1-238-853-11	RES, ADJ, CERMET 1K				
		< SWITCH >				
S2301	1-692-111-11	SWITCH, KEY BOARD (RESET)				
S2302	1-762-805-21	SWITCH, PUSH (1 KEY) (EJECT)				
		< TRANSFORMER >				
T3901	1-431-875-21	TRANSFORMER, DC-DC CONVERTER				
						(D900/D900E)
		< VIBRATOR >				
X801	1-579-466-11	VIBRATOR, CRYSTAL (3.579545MHz)(D900)				
X801	1-579-661-21	OSCILLATOR, CRYSTAL (4.43619MHz)(D900E)				
X1200	1-579-738-21	VIBRATOR, CRYSTAL (14.318182MHz)				
						(D300/D900)
X1200	1-579-780-21	VIBRATOR, CRYSTAL (17.734475MHz)				
						(D300E/D900E)
X2300	1-767-450-11	VIBRATOR, CERAMIC (20MHz)				
X2301	1-760-458-21	VIBRATOR, CRYSTAL (32.798kHz)				
X9001	1-579-466-11	VIBRATOR, CRYSTAL (3.579545MHz)				
						(D300/D900)
X9001	1-579-661-21	OSCILLATOR, CRYSTAL (4.43619MHz)				
						(D300E/D900E)

Ref. No.	Part No.	Description				Remarks
	A-7073-553-A	EX-34 BOARD, COMPLETE				(D900/D900E)
		**********				
	A-7073-579-A	EX-34 BOARD, COMPLETE				(D300/D300E)
		**********				
						(Ref.No.: 3,000 Series)
		< CAPACITOR >				
C201	1-135-149-21	TANTALUM CHIP	2.2uF	20%	10V	
						(D900/D900E)
C202	1-164-346-11	CERAMIC CHIP	1uF		16V	
						(D900/D900E)
C203	1-164-227-11	CERAMIC CHIP	0.022uF	10%	25V	
						(D900/D900E)
C204	1-162-970-11	CERAMIC CHIP	0.01uF	10%	25V	
						(D900/D900E)
C205	1-164-346-11	CERAMIC CHIP	1uF		16V	
						(D900/D900E)
C206	1-164-004-11	CERAMIC CHIP	0.1uF	10%	25V	
						(D900/D900E)
C207	1-104-914-11	TANTAL. CHIP	22uF	20%	16V	
						(D900/D900E)
C208	1-162-974-11	CERAMIC CHIP	0.01uF		50V	
						(D900/D900E)
C209	1-162-918-11	CERAMIC CHIP	18PF	5%	50V	
						(D900/D900E)
C210	1-162-920-11	CERAMIC CHIP	27PF	5%	50V	
						(D900/D900E)
C211	1-162-974-11	CERAMIC CHIP	0.01uF		50V	
						(D900/D900E)
C212	1-113-642-11	TANTAL. CHIP	47uF	20%	10V	
						(D900/D900E)
C213	1-117-749-11	FILM CHIP	0.1uF	20%	50V	
						(D900/D900E)
C214	1-117-749-11	FILM CHIP	0.1uF	20%	50V	
						(D900/D900E)
C215	1-117-749-11	FILM CHIP	0.1uF	20%	50V	
						(D900/D900E)
C216	1-117-749-11	FILM CHIP	0.1uF	20%	50V	
						(D900/D900E)
C219	1-107-823-11	CERAMIC CHIP	0.47uF	10%	16V	
						(D900/D900E)
C220	1-107-823-11	CERAMIC CHIP	0.47uF	10%	16V	
						(D900/D900E)
		< CONNECTOR >				
CN201	1-778-330-21	PIN, CONNECTOR (PC BOARD) 2P				
						(D900/D900E)
CN203	1-770-542-21	CONNECTOR, FFC/FPC 40P				
CN204	1-537-439-11	TARMINAL BOARD, CONNECTOR				
		< DIODE >				
D202	8-719-404-49	DIODE MA111-TX				(D900/D900E)
D203	8-719-404-49	DIODE MA111-TX				(D900/D900E)
D204	8-719-062-16	DIODE 01ZA8.2(TPL3)				
D205	8-719-062-16	DIODE 01ZA8.2(TPL3)				
		< IC >				
IC201	8-759-521-35	IC TL5001CDR				(D900/D900E)
IC202	8-759-075-70	IC TA75S393F-TE85R				(D900/D900E)

Ref. No.	Part No.	Description			Remarks
		< COIL >			
L201	1-414-863-11	INDUCTOR 4.7uH			(D900/D900E)
L202	1-411-705-11	INDUCTOR 0uH			(D900/D900E)
L203	1-415-929-21	INDUCTOR 0uH			(D900/D900E)
		< TRANSISTOR >			
Q201	8-729-037-74	TRANSISTOR UN9213J-(K8).SO			(D900/D900E
Q202	8-729-037-74	TRANSISTOR UN9213J-(K8).SO			(D900/D900E
Q203	8-729-037-61	TRANSISTOR UN9113J-(K8).SO			(D900/D900E
Q204	8-729-037-74	TRANSISTOR UN9213J-(K8).SO			(D900/D900E
Q205	8-729-037-52	TRANSISTOR 2SD2216J-QR(TX).SO			(D900/D900E)
Q206	8-729-037-52	TRANSISTOR 2SD2216J-QR(TX).SO			(D900/D900E)
Q207	8-729-037-74	TRANSISTOR UN9213J-(K8).SO			(D900/D900E
Q208	8-729-037-74	TRANSISTOR UN9213J-(K8).SO			(D900/D900E
Q209	8-729-037-52	TRANSISTOR 2SD2216J-QR(TX).SO			(D900/D900E)
Q210	8-729-823-84	TRANSISTOR FP102-TL			(D900/D900E)
Q211	8-729-042-87	TRANSISTOR FP211-TL			(D900/D900E)
Q212	8-729-042-58	TRANSISTOR UN9111J-(K8).SO			(D900/D900E
		< RESISTOR >			
R201	1-218-867-11	RES,CHIP	6.8K	0.50% 1/16W	(D900/D900E)
R202	1-218-881-11	RES,CHIP	27K	0.50% 1/16W	(D900/D900E)
R203	1-216-829-11	METAL CHIP	4.7K	5% 1/16W	(D900/D900E)
R204	1-216-035-00	METAL CHIP	270	5% 1/10W	(D900/D900E)
R205	1-218-897-11	RES,CHIP	120K	0.50% 1/16W	(D900/D900E)
R206	1-218-867-11	RES,CHIP	6.8K	0.50% 1/16W	(D900/D900E)
R207	1-216-841-11	METAL CHIP	47K	5% 1/16W	(D900/D900E)
R208	1-218-851-11	RES,CHIP	1.5K	0.50% 1/16W	(D900/D900E)
R209	1-216-823-11	METAL CHIP	1.5K	5% 1/16W	(D900/D900E)
R210	1-218-857-11	RES,CHIP	2.7K	0.50% 1/16W	(D900/D900E)
R211	1-216-829-11	METAL CHIP	4.7K	5% 1/16W	(D900/D900E)
R212	1-216-823-11	METAL CHIP	1.5K	5% 1/16W	(D900/D900E)
R213	1-216-833-11	METAL CHIP	10K	5% 1/16W	(D900/D900E)
R214	1-216-845-11	METAL CHIP	100K	5% 1/16W	(D900/D900E)
R215	1-216-833-11	METAL CHIP	10K	5% 1/16W	(D900/D900E)
R217	1-216-837-11	METAL CHIP	22K	5% 1/16W	(D900/D900E)
R218	1-216-817-11	METAL CHIP	470	5% 1/16W	(D900/D900E)
R219	1-218-825-11	RES,CHIP	120	0.50% 1/16W	(D900/D900E)
R222	1-216-810-11	METAL CHIP	120	5% 1/16W	(D900/D900E)
R223	1-216-817-11	METAL CHIP	470	5% 1/16W	(D900/D900E)

Ref. No.	Part No.	Description			Remarks
R224	1-216-837-11	METAL CHIP	22K	5% 1/16W	(D900/D900E)
R225	1-216-816-11	METAL CHIP	390	5% 1/16W	(D900/D900E)
R227	1-216-035-00	METAL CHIP	270	5% 1/10W	(D900/D900E)
		< TRANSFORMER >			
⚠T201	1-431-547-11	TRANSFORMER, DC/AC INVERTER			(D900/D900E)
		FP-242 BOARD, COMPLETE(NOT SUPPLIED)			
		**********			(Ref. No. 1,000)
	3-976-458-01	HOLDER (T), SENSOR			
	3-976-644-01	SENSOR, HOLDER, S			
		< DIODE >			
D901	8-719-050-98	DIODE LN57.SO			
		< HOLE ELEMENT >			
H901	8-719-033-37	ELEMENT, HALL HW-105C			
H902	8-719-033-37	ELEMENT, HALL HW-105C			
		< RESISTOR >			
R901	1-216-807-11	METAL CHIP	68	5% 1/16W	
R902	1-216-807-11	METAL CHIP	68	5% 1/16W	
R903	1-216-807-11	METAL CHIP	68	5% 1/16W	
R904	1-216-807-11	METAL CHIP	68	5% 1/16W	
		FP-584 FLEXIBLE BOARD (NOT SUPPLIED)			
		**********			(Ref.No.: 1,000 Series)
	3-976-824-01	HOLDER, FPC			
		< CONNECTOR >			
CN901	1-770-312-11	CONNECTOR 4P			
		< TRANSISTOR >			
Q901	8-729-028-71	TRANSISTOR PN166.SO			
Q902	8-729-028-71	TRANSISTOR PN166.SO			
		< SWITCH >			
S901	1-762-351-11	SWITCH, PUSH (1 KEY) (REC PROOF)			
S903	1-572-467-21	SWITCH, PUSH (1 KEY) (CC DOWN)			
	1-667-400-11	FP-571 FLEXIBLE BOARD			
		**********			(Ref.No.: 1,000 Series)
		< BATTERY >			
BT001	1-528-724-21	BATTERY, V/L RICHARGEABL			

Note :	**Note :**
The components identified by mark ⚠ or dotted line with mark ⚠ are critical for safety. Replace only with part number specified.	Les composants identifiés par une marque ⚠ sont critiques pour la sécurité. Ne les remplacer que par une pièce portant le numéro spécifié.

FP-574 IO-62

Ref. No.	Part No.	Description	Remarks
	1-667-403-31	FP-574 FLEXIBLE BOARD	
		**********	
			(Ref. No. 1,000)
		< JACK >	
J002	1-695-514-21	JACK (SMALL TYPE) 1P (HEADPHONES)	
	A-7073-554-A	IO-62 BOARD, COMPLETE (D900)	
		**********	
	A-7073-580-A	IO-62 BOARD, COMPLETE (D300)	
		**********	
	A-7073-622-A	IO-62 BOARD, COMPLETE (D900E)	
		**********	
	A-7073-623-A	IO-62 BOARD, COMPLETE (D300E)	
		**********	
			(Ref.No.: 3,000 Series)
		< CAPACITOR >	
C101	1-162-964-11	CERAMIC CHIP 0.001uF 10% 50V	(D300E/D900E)
C102	1-162-964-11	CERAMIC CHIP 0.001uF 10% 50V	(D300E/D900E)
C103	1-162-964-11	CERAMIC CHIP 0.001uF 10% 50V	(D300E/D900E)
C104	1-162-964-11	CERAMIC CHIP 0.001uF 10% 50V	(D300E/D900E)
C107	1-162-964-11	CERAMIC CHIP 0.001uF 10% 50V	(D300E/D900E)
C110	1-162-964-11	CERAMIC CHIP 0.001uF 10% 50V	(D300E/D900E)
C116	1-162-970-11	CERAMIC CHIP 0.01uF 10% 25V	
C117	1-162-964-11	CERAMIC CHIP 0.001uF 10% 50V	
C118	1-162-964-11	CERAMIC CHIP 0.001uF 10% 50V	
C119	1-162-964-11	CERAMIC CHIP 0.001uF 10% 50V	
C120	1-162-964-11	CERAMIC CHIP 0.001uF 10% 50V	
C121	1-162-964-11	CERAMIC CHIP 0.001uF 10% 50V	
C122	1-162-964-11	CERAMIC CHIP 0.001uF 10% 50V	
C123	1-162-964-11	CERAMIC CHIP 0.001uF 10% 50V	
C124	1-162-964-11	CERAMIC CHIP 0.001uF 10% 50V	
		< CONNECTOR >	
CN103	1-750-332-41	CONNECTOR, BOARD TO BOARD 48P	
CN104	1-573-371-21	CONNECTOR, BOARD TO BOARD 14P	
CN105	1-774-631-21	CONNECTOR, FFC/FPC 6P	
* CN106	1-695-320-21	PIN, CONNECTOR (1.5MM)(SMD) 2P	
		< DIODE >	
D101	8-719-062-16	DIODE 01ZA8.2(TPL3)	
D102	8-719-062-16	DIODE 01ZA8.2(TPL3)	
D103	8-719-420-14	DIODE MA8082-TX	
D104	8-719-062-16	DIODE 01ZA8.2(TPL3)	
D105	8-719-062-16	DIODE 01ZA8.2(TPL3)	
D106	8-719-062-16	DIODE 01ZA8.2(TPL3)	
D107	8-719-062-16	DIODE 01ZA8.2(TPL3)	
D108	8-719-420-14	DIODE MA8082-TX	
D109	8-719-061-82	DIODE TLSU1002(TPX1,SONY)	
D110	8-719-062-16	DIODE 01ZA8.2(TPL3)	
D111	8-719-420-14	DIODE MA8082-TX	
D112	8-719-420-14	DIODE MA8082-TX	
D113	8-719-404-49	DIODE MA111-TX	
D114	8-719-062-16	DIODE 01ZA8.2(TPL3)	
D115	8-719-062-16	DIODE 01ZA8.2(TPL3)	
D116	8-719-062-16	DIODE 01ZA8.2(TPL3)	
D117	8-719-062-16	DIODE 01ZA8.2(TPL3)	
D118	8-719-062-16	DIODE 01ZA8.2(TPL3)	
		< FERRITE BEAD >	
FB101	1-414-385-11	INDUCTOR CHIP 0UH	
		< JACK >	
J102	1-537-747-31	TERMINAL BOARD (VIDEO/AUDIO/RFU DC)	
J103	1-566-850-31	CONNECTOR, (S) TERMINAL 4P (S VIDEO)	
		< COIL >	
L101	1-414-072-11	INDUCTOR 1uH	
L102	1-412-963-11	INDUCTOR 100uH (D300E/D900E)	
L103	1-412-963-11	INDUCTOR 100uH (D300E/D900E)	
L104	1-412-963-11	INDUCTOR 100uH (D300E/D900E)	
L105	1-412-963-11	INDUCTOR 100uH	
L106	1-412-963-11	INDUCTOR 100uH	
L107	1-412-963-11	INDUCTOR 100uH	
L108	1-412-963-11	INDUCTOR 100uH	
		< RESISTOR >	
R101	1-216-864-11	METAL CHIP 0 5% 1/16W	(D300/D900)
R102	1-216-864-11	METAL CHIP 0 5% 1/16W	(D300/D900)
R105	1-216-864-11	METAL CHIP 0 5% 1/16W	(D300/D900)
R110	1-216-864-11	METAL CHIP 0 5% 1/16W	
R111	1-216-864-11	METAL CHIP 0 5% 1/16W	
R112	1-216-864-11	METAL CHIP 0 5% 1/16W	
R120	1-216-821-11	METAL CHIP 1K 5% 1/16W	
R121	1-216-821-11	METAL CHIP 1K 5% 1/16W	
R124	1-216-824-11	METAL CHIP 1.8K 5% 1/16W	
R128	1-216-824-11	METAL CHIP 1.8K 5% 1/16W	
R129	1-216-826-11	METAL CHIP 2.7K 5% 1/16W	
R130	1-216-829-11	METAL CHIP 4.7K 5% 1/16W	
R131	1-216-833-11	METAL CHIP 10K 5% 1/16W	
R132	1-216-817-11	METAL CHIP 470 5% 1/16W	
R133	1-216-864-11	METAL CHIP 0 5% 1/16W	
R134	1-216-864-11	METAL CHIP 0 5% 1/16W	
		< SWITCH >	
S101	1-692-088-41	SWITCH, TACTILE (LASER LINK)	
S102	1-692-088-41	SWITCH, TACTILE (MENU)	
S103	1-692-088-41	SWITCH, TACTILE (BRIGHT +) (D900/D900E)	
S104	1-692-088-41	SWITCH, TACTILE (BRIGHT –) (D900/D900E)	
S105	1-692-088-41	SWITCH, TACTILE (VOLUME +)	
S106	1-692-088-41	SWITCH, TACTILE (VOLUME –)	
S107	1-771-025-21	SWITCH, ROTARY (ENCODER)	
			(CONTROL DIAL)

Ref. No.	Part No.	Description			Remarks
	A-7073-555-A	IR-29 BOARD, COMPLETE (D900/D900E)			
		**********			
	A-7073-581-A	IR-29 BOARD, COMPLETE (D300/D300E)			
		**********			
					(Ref.No.: 3,000 Series)
		< CAPACITOR >			
C382	1-135-181-21	TANTALUM CHIP	4.7uF	20%	6.3V
C392	1-107-826-11	CERAMIC CHIP	0.1uF	10%	16V
C393	1-109-982-11	CERAMIC CHIP	1uF	10%	10V
		< CONNECTOR >			
CN361	1-766-866-21	CONNECTOR, FFC/FPC 6P			
		< DIODE >			
D362	8-749-060-65	DIODE DCC3810			
D363	8-719-061-86	DIODE DCR2810			
		< FUSE >			
F361	1-533-874-11	FUSE, MICRO			
		< COIL >			
L363	1-414-078-11	INDUCTOR 10uH			
		< TRANSISTOR >			
Q365	8-729-140-75	TRANSISTOR 2SD999-T1-CLCK			
		< RESISTOR >			
R388	1-216-302-00	METAL CHIP	2.7	5%	1/10W
R389	1-216-311-00	METAL CHIP	6.8	5%	1/10W
R390	1-216-864-11	METAL CHIP	0	5%	1/16W
					(D900/D900E)
R392	1-216-801-11	METAL CHIP	22	5%	1/16W
		< SWITCH >			
S361	1-572-467-21	SWITCH, PUSH (1 KEY) (PANEL CLOSE)			
					(D900/D900E)
	A-7073-552-A	RJ-77 BOARD, COMPLETE (D300/D900)			
		**********			
	A-7073-621-A	RJ-77 BOARD, COMPLETE (D300E/D900E)			
		**********			
					(Ref.No.: 20,000 Series)
		< CAPACITOR >			
C1600	1-107-826-11	CERAMIC CHIP	0.1uF	10%	16V
C1601	1-107-826-11	CERAMIC CHIP	0.1uF	10%	16V
C1602	1-164-360-11	CERAMIC CHIP	0.1uF		16V
C1603	1-164-360-11	CERAMIC CHIP	0.1uF		16V
C1604	1-164-943-11	CERAMIC CHIP	0.01uF	10%	16V
C1605	1-164-943-11	CERAMIC CHIP	0.01uF	10%	16V
C1700	1-164-943-11	CERAMIC CHIP	0.01uF	10%	16V
C1703	1-164-943-11	CERAMIC CHIP	0.01uF	10%	16V
C1704	1-164-943-11	CERAMIC CHIP	0.01uF	10%	16V
C1900	1-111-253-11	TANTAL. CHIP	100uF	20%	6.3V

Ref. No.	Part No.	Description			Remarks
C1901	1-164-943-11	CERAMIC CHIP	0.01uF	10%	16V
C1902	1-164-937-11	CERAMIC CHIP	0.001uF	10%	16V
C1903	1-164-937-11	CERAMIC CHIP	0.001uF	10%	16V
C1904	1-164-937-11	CERAMIC CHIP	0.001uF	10%	16V
C1905	1-165-176-11	CERAMIC CHIP	0.047uF	10%	16V
C1906	1-164-505-11	CERAMIC CHIP	2.2uF		16V
C1907	1-107-820-11	CERAMIC CHIP	0.1uF		16V
C1908	1-164-937-11	CERAMIC CHIP	0.001uF	10%	16V
C1909	1-107-820-11	CERAMIC CHIP	0.1uF		16V
C1910	1-164-937-11	CERAMIC CHIP	0.001uF	10%	16V
C1911	1-164-943-11	CERAMIC CHIP	0.01uF	10%	16V
C1912	1-164-937-11	CERAMIC CHIP	0.001uF	10%	16V
C1913	1-164-937-11	CERAMIC CHIP	0.001uF	10%	16V
C1914	1-164-937-11	CERAMIC CHIP	0.001uF	10%	16V
C1915	1-165-176-11	CERAMIC CHIP	0.047uF	10%	16V
C1916	1-164-505-11	CERAMIC CHIP	2.2uF		16V
C1917	1-164-943-11	CERAMIC CHIP	0.01uF	10%	16V
C1918	1-164-943-11	CERAMIC CHIP	0.01uF	10%	16V
C2111	1-109-982-11	CERAMIC CHIP	1uF	10%	10V
C2112	1-109-982-11	CERAMIC CHIP	1uF	10%	10V
C2700	1-164-947-11	CERAMIC CHIP	0.01uF		16V
C2701	1-135-259-11	TANTAL. CHIP	10uF	20%	6.3V
C2702	1-164-947-11	CERAMIC CHIP	0.01uF		16V
C2703	1-104-851-11	TANTAL. CHIP	10uF	20%	10V
C2704	1-164-947-11	CERAMIC CHIP	0.01uF		16V
C2708	1-164-357-11	CERAMIC CHIP	1000PF	5%	50V
C2709	1-164-848-11	CERAMIC CHIP	8PF	0.5PF	16V
C2712	1-135-259-11	TANTAL. CHIP	10uF	20%	6.3V
C2713	1-164-947-11	CERAMIC CHIP	0.01uF		16V
C2714	1-164-677-11	CERAMIC CHIP	0.033uF	10%	16V
C2715	1-164-677-11	CERAMIC CHIP	0.033uF	10%	16V
C2718	1-164-947-11	CERAMIC CHIP	0.01uF		16V
C2720	1-164-947-11	CERAMIC CHIP	0.01uF		16V
C2721	1-104-851-11	TANTAL. CHIP	10uF	20%	10V
C2724	1-164-315-11	CERAMIC CHIP	470PF	5%	50V
C2725	1-164-943-11	CERAMIC CHIP	0.01uF	10%	16V
C2726	1-107-820-11	CERAMIC CHIP	0.1uF		16V
C2727	1-107-820-11	CERAMIC CHIP	0.1uF		16V
C2728	1-107-820-11	CERAMIC CHIP	0.1uF		16V
C2731	1-107-820-11	CERAMIC CHIP	0.1uF		16V
C2732	1-164-866-11	CERAMIC CHIP	47PF	5%	16V
C2733	1-164-848-11	CERAMIC CHIP	8PF	0.5PF	16V
C2735	1-164-947-11	CERAMIC CHIP	0.01uF		16V
C2736	1-164-942-11	CERAMIC CHIP	0.0068uF	10%	16V
C2737	1-164-866-11	CERAMIC CHIP	47PF	5%	16V
C2738	1-164-866-11	CERAMIC CHIP	47PF	5%	16V
C2744	1-135-259-11	TANTAL. CHIP	10uF	20%	6.3V
C2745	1-164-943-11	CERAMIC CHIP	0.01uF	10%	16V
C2747	1-164-947-11	CERAMIC CHIP	0.01uF		16V
C2749	1-104-851-11	TANTAL. CHIP	10uF	20%	10V
C2750	1-164-947-11	CERAMIC CHIP	0.01uF		16V
C2751	1-164-947-11	CERAMIC CHIP	0.01uF		16V
C2752	1-164-874-11	CERAMIC CHIP	100PF	5%	16V
C2753	1-107-826-11	CERAMIC CHIP	0.1uF	10%	16V
C2754	1-107-826-11	CERAMIC CHIP	0.1uF	10%	16V

Ref. No.	Part No.	Description			Remarks
C2755	1-135-259-11	TANTAL. CHIP	10uF	20%	6.3V
C2757	1-107-826-11	CERAMIC CHIP	0.1uF	10%	16V
C2758	1-164-947-11	CERAMIC CHIP	0.01uF		16V
C2759	1-164-878-11	CERAMIC CHIP	150PF	5%	16V
C2763	1-164-878-11	CERAMIC CHIP	150PF	5%	16V
C2769	1-107-820-11	CERAMIC CHIP	0.1uF		16V
C2770	1-107-820-11	CERAMIC CHIP	0.1uF		16V
C2771	1-107-820-11	CERAMIC CHIP	0.1uF		16V
C2772	1-164-943-11	CERAMIC CHIP	0.01uF	10%	16V
C2773	1-164-943-11	CERAMIC CHIP	0.01uF	10%	16V
C2774	1-164-943-11	CERAMIC CHIP	0.01uF	10%	16V
C2799	1-164-943-11	CERAMIC CHIP	0.01uF	10%	16V
C3100	1-164-939-11	CERAMIC CHIP	0.0022uF	10%	16V
C3101	1-164-943-11	CERAMIC CHIP	0.01uF	10%	16V
C3102	1-107-820-11	CERAMIC CHIP	0.1uF		16V
C3103	1-109-935-11	TANTAL. CHIP	4.7uF	20%	6.3V
C3104	1-164-850-11	CERAMIC CHIP	10PF	0.5PF	16V
C3105	1-164-943-11	CERAMIC CHIP	0.01uF	10%	16V
C3106	1-107-826-11	CERAMIC CHIP	0.1uF	10%	16V
C3107	1-164-943-11	CERAMIC CHIP	0.01uF	10%	16V
C3108	1-164-939-11	CERAMIC CHIP	0.0022uF	10%	16V
C3109	1-164-943-11	CERAMIC CHIP	0.01uF	10%	16V
C3110	1-107-826-11	CERAMIC CHIP	0.1uF	10%	16V
C3111	1-164-862-11	CERAMIC CHIP	33PF	5%	16V
C3112	1-164-862-11	CERAMIC CHIP	33PF	5%	16V
C3113	1-164-862-11	CERAMIC CHIP	33PF	5%	16V
C3114	1-164-739-11	CERAMIC CHIP	560PF	5%	50V
C3115	1-109-982-11	CERAMIC CHIP	1uF	10%	10V
C3116	1-164-942-11	CERAMIC CHIP	0.0068uF	10%	16V
C3117	1-107-826-11	CERAMIC CHIP	0.1uF	10%	16V
C3118	1-164-937-11	CERAMIC CHIP	0.001uF	10%	16V
C3119	1-107-826-11	CERAMIC CHIP	0.1uF	10%	16V
C3120	1-107-826-11	CERAMIC CHIP	0.1uF	10%	16V
C3121	1-107-826-11	CERAMIC CHIP	0.1uF	10%	16V
C3123	1-164-943-11	CERAMIC CHIP	0.01uF	10%	16V
C3125	1-164-943-11	CERAMIC CHIP	0.01uF	10%	16V
C3126	1-164-942-11	CERAMIC CHIP	0.0068uF	10%	16V
C3127	1-164-937-11	CERAMIC CHIP	0.001uF	10%	16V
C3128	1-164-943-11	CERAMIC CHIP	0.01uF	10%	16V
C3129	1-164-943-11	CERAMIC CHIP	0.01uF	10%	16V
C3130	1-164-934-11	CERAMIC CHIP	330PF	10%	16V
C3131	1-107-826-11	CERAMIC CHIP	0.1uF	10%	16V
C3132	1-165-176-11	CERAMIC CHIP	0.047uF	10%	16V
C3133	1-164-943-11	CERAMIC CHIP	0.01uF	10%	16V
C3134	1-107-826-11	CERAMIC CHIP	0.1uF	10%	16V
C3135	1-107-687-11	TANTAL. CHIP	3.3uF	20%	20V
C3136	1-165-176-11	CERAMIC CHIP	0.047uF	10%	16V
C3137	1-107-826-11	CERAMIC CHIP	0.1uF	10%	16V
C3138	1-107-686-11	TANTAL. CHIP	4.7uF	20%	16V
C3139	1-164-943-11	CERAMIC CHIP	0.01uF	10%	16V
C3140	1-107-826-11	CERAMIC CHIP	0.1uF	10%	16V
C3141	1-107-826-11	CERAMIC CHIP	0.1uF	10%	16V
C3142	1-107-686-11	TANTAL. CHIP	4.7uF	20%	16V
C3143	1-164-943-11	CERAMIC CHIP	0.01uF	10%	16V
C3144	1-107-826-11	CERAMIC CHIP	0.1uF	10%	16V

Ref. No.	Part No.	Description			Remarks
C3145	1-107-826-11	CERAMIC CHIP	0.1uF	10%	16V
C3146	1-107-826-11	CERAMIC CHIP	0.1uF	10%	16V
C3147	1-107-826-11	CERAMIC CHIP	0.1uF	10%	16V
C3148	1-107-826-11	CERAMIC CHIP	0.1uF	10%	16V
C3149	1-107-826-11	CERAMIC CHIP	0.1uF	10%	16V
C3150	1-164-943-11	CERAMIC CHIP	0.01uF	10%	16V
C3152	1-107-826-11	CERAMIC CHIP	0.1uF	10%	16V
C3153	1-164-850-11	CERAMIC CHIP	10PF	0.5PF	16V
C3154	1-164-850-11	CERAMIC CHIP	10PF	0.5PF	16V
C3155	1-109-935-11	TANTAL. CHIP	4.7uF	20%	6.3V
C3157	1-107-826-11	CERAMIC CHIP	0.1uF	10%	16V
C3158	1-107-826-11	CERAMIC CHIP	0.1uF	10%	16V
C3159	1-164-866-11	CERAMIC CHIP	47PF	5%	16V
C3500	1-107-820-11	CERAMIC CHIP	0.1uF		16V
C3501	1-107-820-11	CERAMIC CHIP	0.1uF		16V
C3504	1-107-820-11	CERAMIC CHIP	0.1uF		16V
C3506	1-107-820-11	CERAMIC CHIP	0.1uF		16V
C3512	1-109-982-11	CERAMIC CHIP	1uF	10%	10V
C3514	1-164-882-11	CERAMIC CHIP	220PF	5%	16V
C3520	1-107-820-11	CERAMIC CHIP	0.1uF		16V
C3521	1-107-820-11	CERAMIC CHIP	0.1uF		16V
C3527	1-135-259-11	TANTAL. CHIP	10uF	20%	6.3V
C3528	1-135-259-11	TANTAL. CHIP	10uF	20%	6.3V
C3529	1-107-820-11	CERAMIC CHIP	0.1uF		16V
C3530	1-107-820-11	CERAMIC CHIP	0.1uF		16V
C3531	1-104-847-11	TANTAL. CHIP	22uF	20%	4V
C6100	1-104-908-11	TANTAL. CHIP	47uF	20%	4V
C6101	1-164-943-11	CERAMIC CHIP	0.01uF	10%	16V
C6102	1-164-937-11	CERAMIC CHIP	0.001uF	10%	16V
C6103	1-164-937-11	CERAMIC CHIP	0.001uF	10%	16V
C6104	1-164-937-11	CERAMIC CHIP	0.001uF	10%	16V
C6105	1-107-820-11	CERAMIC CHIP	0.1uF		16V
C6106	1-164-943-11	CERAMIC CHIP	0.01uF	10%	16V
C6107	1-107-823-11	CERAMIC CHIP	0.47uF	10%	16V
C6108	1-107-820-11	CERAMIC CHIP	0.1uF		16V
C7901	1-164-943-11	CERAMIC CHIP	0.01uF	10%	16V
C7902	1-164-943-11	CERAMIC CHIP	0.01uF	10%	16V
C7903	1-164-852-11	CERAMIC CHIP	12PF	5%	16V
C7904	1-164-850-11	CERAMIC CHIP	10PF	0.5PF	16V
C7905	1-109-935-11	TANTAL. CHIP	4.7uF	20%	6.3V
C7906	1-164-943-11	CERAMIC CHIP	0.01uF	10%	16V
C7907	1-164-866-11	CERAMIC CHIP	47PF	5%	16V
C7908	1-164-843-11	CERAMIC CHIP	3PF	0.25PF	16V
C7909	1-109-982-11	CERAMIC CHIP	1uF	10%	10V
C7910	1-164-874-11	CERAMIC CHIP	100PF	5%	16V
C7911	1-107-820-11	CERAMIC CHIP	0.1uF		16V
C7917	1-164-489-11	CERAMIC CHIP	0.22uF	10%	16V
C7918	1-164-874-11	CERAMIC CHIP	100PF	5%	16V
C7920	1-135-259-11	TANTAL. CHIP	10uF	20%	6.3V
C7921	1-107-820-11	CERAMIC CHIP	0.1uF		16V
C7923	1-107-820-11	CERAMIC CHIP	0.1uF		16V
C7924	1-107-826-11	CERAMIC CHIP	0.1uF	10%	16V
C7928	1-107-820-11	CERAMIC CHIP	0.1uF		16V
C7929	1-107-820-11	CERAMIC CHIP	0.1uF		16V
C7931	1-164-357-11	CERAMIC CHIP	1000PF	5%	50V
C7932	1-164-357-11	CERAMIC CHIP	1000PF	5%	50V
C7933	1-164-357-11	CERAMIC CHIP	1000PF	5%	50V

Ref. No.	Part No.	Description	Remarks
		< CONNECTOR >	
CN2708	1-573-350-11	CONNECTOR, FFC/FPC 10P	
CN3100	1-766-654-21	CONNECTOR, FFC/FPC 18P	
CN3101	1-573-346-21	CONNECTOR, FFC/FPC 6P	
CN3102	1-573-357-11	CONNECTOR, FFC/FPC 17P	
CN3103	1-573-351-11	CONNECTOR, FFC/FPC 11P	
CN3104	1-691-483-21	CONNECTOR, FFC/FPC 4P	
CN9901	1-778-086-21	CONNECTOR, BOARD TO BOARD 80P	
CN9904	1-750-332-41	CONNECTOR, BOARD TO BOARD 48P	
		< DIODE >	
D1900	8-719-055-86	DIODE KV1470TL1-3	
D1901	8-719-027-95	DIODE HSM88WK-TL	
D1902	8-719-055-86	DIODE KV1470TL1-3	
D1903	8-719-027-95	DIODE HSM88WK-TL	
D1904	8-719-055-86	DIODE KV1470TL1-3	
D2702	8-719-052-27	DIODE 1SS351-TB	
D2703	8-719-052-27	DIODE 1SS351-TB	
D6100	8-719-027-95	DIODE HSM88WK-TL	
D6101	8-719-055-86	DIODE KV1470TL1-3	
D7901	8-719-055-86	DIODE KV1470TL1-3	
		< FERRITE BEAD >	
FB1600	1-543-955-11	FERRITE 0UH	
FB1601	1-543-955-11	FERRITE 0UH	
FB1900	1-543-955-11	FERRITE 0UH	
FB1901	1-543-955-11	FERRITE 0UH	
FB1902	1-543-955-11	FERRITE 0UH	
FB1903	1-543-955-11	FERRITE 0UH	
FB1904	1-543-955-11	FERRITE 0UH	
FB1905	1-543-955-11	FERRITE 0UH	
FB1906	1-543-955-11	FERRITE 0UH	
FB2100	1-543-955-11	FERRITE 0UH	
FB3100	1-543-955-11	FERRITE 0UH	
FB6100	1-543-955-11	FERRITE 0UH	
		< FILTER >	
FL2700	1-411-951-21	DELAY LINE, LC (23NS)	
FL2701	1-233-734-21	FILTER, LOW PASS	
		< IC >	
IC1600	8-759-488-73	IC ZA4024GFZR	
IC1601	1-801-689-11	IC TGA-D3103HA	
IC1602	8-759-488-73	IC ZA4024GFZR	
IC1700	8-759-433-17	IC uPD482445LG4-B10-9MH-E2-HDC	
IC1701	1-801-484-11	IC TGA-uPD82014UB-501-J	
IC1900	1-801-477-11	IC TGA-D3106HA	
IC1901	1-801-478-11	IC TGA-D3107HA	
IC1902	8-759-196-96	IC TC7SH08FU-TE85R	
IC2100	1-803-130-11	IC TGA-P912032-069HA	
IC2700	8-759-426-25	IC MB88346LPFV-G-BND-ER	
IC2701	8-752-371-18	IC CXD2302Q-T4	
IC2702	8-752-070-12	IC CXA1762Q-T4	
IC2703	8-752-073-50	IC CXA2018Q-T4	
IC2704	8-752-074-59	IC CXA2023R-T4	
IC3100	1-803-129-11	IC TGA-P912032-070HA	
IC3101	8-759-433-16	IC MB4195PFV-G-BND-ER	
IC3102	8-759-431-30	IC CXA8062R-EB	
IC3103	8-759-385-94	IC CXA8053Q-TE-B	
IC3104	8-759-434-46	IC TA8486F(EL)	
IC3500	8-759-464-64	IC HD6433837TB52X	
IC3501	8-759-431-57	IC F643845GGF-TEB	
IC3502	8-759-432-00	IC TSB11LV01PT-TEB	
IC6101	8-752-386-38	IC CXD3105R-T6	
IC6102	8-759-445-93	IC AK6440AM-E2	
IC7901	1-801-473-11	IC TGA-D2707HF	
IC7903	1-801-486-11	IC TGA-MSM6602A-3BV	
IC7904	8-759-485-40	IC TLV2231CDBV2	
IC7908	8-759-079-66	IC TC74VHC123AFS(EL)	
IC7909	8-759-523-95	IC TC74VHC74FT(EL) (D300/D900)	
IC7911	8-759-079-61	IC TC74VHC74FS(EL)	
IC7912	8-759-195-81	IC TC7S86FU(TE85R)	
IC7913	8-759-058-62	IC TC7S08FU(TE85R)	
IC7914	8-759-083-94	IC TC7W74FU(TE12R)	
		< COIL >	
L1600	1-414-754-11	INDUCTOR 10uH	
L1601	1-414-754-11	INDUCTOR 10uH	
L1900	1-414-755-11	INDUCTOR 22uH	
L1901	1-412-938-61	INDUCTOR 0.82uH	
L1902	1-412-948-11	INDUCTOR 5.6uH	
L2100	1-414-754-11	INDUCTOR 10uH	
L2700	1-412-963-11	INDUCTOR 100uH	
L2703	1-412-963-11	INDUCTOR 100uH	
L2704	1-414-754-11	INDUCTOR 10uH	
L2705	1-414-754-11	INDUCTOR 10uH	
L2707	1-414-754-11	INDUCTOR 10uH	
L2708	1-414-754-11	INDUCTOR 10uH	
L2709	1-414-754-11	INDUCTOR 10uH	
L2710	1-414-754-11	INDUCTOR 10uH	
L2711	1-414-754-11	INDUCTOR 10uH	
L3100	1-414-754-11	INDUCTOR 10uH	
L3101	1-414-754-11	INDUCTOR 10uH	
L3102	1-414-754-11	INDUCTOR 10uH	
L3103	1-414-754-11	INDUCTOR 10uH	
L3504	1-414-754-11	INDUCTOR 10uH	
L3505	1-412-963-11	INDUCTOR 100uH	
L3506	1-414-753-91	INDUCTOR 4.7uH	
L6100	1-414-755-11	INDUCTOR 22uH	
L6101	1-412-936-11	INDUCTOR 0.56uH	
L7901	1-414-754-11	INDUCTOR 10uH	
L7902	1-411-273-21	COIL, VARIABLE	
L7904	1-414-754-11	INDUCTOR 10uH	
		< TRANSISTOR >	
Q2701	8-729-037-53	TRANSISTOR 2SB1462J-QR(K8).SO	
Q2702	8-729-037-52	TRANSISTOR 2SD2216J-QR(K8).SO	
Q2703	8-729-037-52	TRANSISTOR 2SD2216J-QR(K8).SO	
Q2704	8-729-037-52	TRANSISTOR 2SD2216J-QR(K8).SO	
Q2705	8-729-037-52	TRANSISTOR 2SD2216J-QR(K8).SO	
Q2706	8-729-037-72	TRANSISTOR UN9211J-(K8).SO	
Q2707	8-729-141-48	TRANSISTOR 2SB624-T1BV4	
Q2708	8-729-928-19	TRANSISTOR 2SA1774TL-QR	
Q2709	8-729-037-72	TRANSISTOR UN9211J-(K8).SO	
Q2710	8-729-037-52	TRANSISTOR 2SD2216J-QR(K8).SO	

RJ-77

Ref. No.	Part No.	Description				Remarks
Q2711	8-729-037-52	TRANSISTOR 2SD2216J-QR(K8).SO				
Q3100	8-729-037-52	TRANSISTOR 2SD2216J-QR(K8).SO				
		< RESISTOR >				
R1601	1-218-953-11	RES,CHIP	1K	5%	1/16W	
R1900	1-218-937-11	RES,CHIP	47	5%	1/16W	
R1901	1-218-937-11	RES,CHIP	47	5%	1/16W	
R1902	1-218-953-11	RES,CHIP	1K	5%	1/16W	
R1903	1-218-965-11	RES,CHIP	10K	5%	1/16W	
R1904	1-218-965-11	RES,CHIP	10K	5%	1/16W	
R1905	1-218-961-11	RES,CHIP	4.7K	5%	1/16W	
R1906	1-218-937-11	RES,CHIP	47	5%	1/16W	
R1907	1-218-949-11	RES,CHIP	470	5%	1/16W	
R1908	1-218-977-11	RES,CHIP	100K	5%	1/16W	
R1909	1-218-977-11	RES,CHIP	100K	5%	1/16W	
R1910	1-218-990-11	SHORT	0			
R1911	1-218-977-11	RES,CHIP	100K	5%	1/16W	
R1912	1-218-977-11	RES,CHIP	100K	5%	1/16W	
R1914	1-218-990-11	SHORT	0			
R1915	1-218-990-11	SHORT	0			
R1917	1-218-949-11	RES,CHIP	470	5%	1/16W	
R1918	1-218-965-11	RES,CHIP	10K	5%	1/16W	
R1919	1-218-965-11	RES,CHIP	10K	5%	1/16W	
R1920	1-218-947-11	RES,CHIP	330	5%	1/16W	
R1921	1-218-937-11	RES,CHIP	47	5%	1/16W	
R1922	1-218-961-11	RES,CHIP	4.7K	5%	1/16W	
R1923	1-218-990-11	SHORT	0			
R1924	1-218-953-11	RES,CHIP	1K	5%	1/16W	
R1925	1-218-953-11	RES,CHIP	1K	5%	1/16W	
R1926	1-218-977-11	RES,CHIP	100K	5%	1/16W	
R1927	1-218-937-11	RES,CHIP	47	5%	1/16W	
R1928	1-218-937-11	RES,CHIP	47	5%	1/16W	
R1929	1-218-990-11	SHORT	0			
R1930	1-218-990-11	SHORT	0			
R1931	1-218-990-11	SHORT	0			
R2122	1-218-977-11	RES,CHIP	100K	5%	1/16W	
R2123	1-218-977-11	RES,CHIP	100K	5%	1/16W	
R2124	1-218-953-11	RES,CHIP	1K	5%	1/16W	
R2125	1-218-977-11	RES,CHIP	100K	5%	1/16W	
R2126	1-218-977-11	RES,CHIP	100K	5%	1/16W	
R2127	1-218-977-11	RES,CHIP	100K	5%	1/16W	
R2128	1-218-977-11	RES,CHIP	100K	5%	1/16W	
R2129	1-218-977-11	RES,CHIP	100K	5%	1/16W	
R2130	1-218-977-11	RES,CHIP	100K	5%	1/16W	
R2131	1-218-961-11	RES,CHIP	4.7K	5%	1/16W	
R2172	1-218-977-11	RES,CHIP	100K	5%	1/16W	
R2173	1-218-973-11	RES,CHIP	47K	5%	1/16W	(D300/D900)
R2174	1-218-973-11	RES,CHIP	47K	5%	1/16W	(D300E/D900E)
R2175	1-218-973-11	RES,CHIP	47K	5%	1/16W	
R2701	1-218-973-11	RES,CHIP	47K	5%	1/16W	
R2702	1-218-990-11	SHORT	0			
R2703	1-218-971-11	RES,CHIP	33K	5%	1/16W	
R2704	1-218-953-11	RES,CHIP	1K	5%	1/16W	
R2705	1-218-953-11	RES,CHIP	1K	5%	1/16W	

Ref. No.	Part No.	Description				Remarks
R2706	1-218-990-11	SHORT	0			
R2707	1-218-969-11	RES,CHIP	22K	5%	1/16W	
R2709	1-218-969-11	RES,CHIP	22K	5%	1/16W	
R2711	1-218-985-11	RES,CHIP	470K	5%	1/16W	
R2712	1-218-985-11	RES,CHIP	470K	5%	1/16W	
R2713	1-218-969-11	RES,CHIP	22K	5%	1/16W	
R2714	1-218-971-11	RES,CHIP	33K	5%	1/16W	
R2717	1-218-953-11	RES,CHIP	1K	5%	1/16W	
R2718	1-218-973-11	RES,CHIP	47K	5%	1/16W	
R2719	1-218-971-11	RES,CHIP	33K	5%	1/16W	
R2720	1-218-961-11	RES,CHIP	4.7K	5%	1/16W	
R2721	1-218-939-11	RES,CHIP	68	5%	1/16W	
R2727	1-218-948-11	RES,CHIP	390	5%	1/16W	
R2735	1-218-973-11	RES,CHIP	47K	5%	1/16W	
R2737	1-218-950-11	RES,CHIP	560	5%	1/16W	
R2738	1-218-944-11	RES,CHIP	180	5%	1/16W	
R2740	1-218-967-11	RES,CHIP	15K	5%	1/16W	
R2741	1-218-969-11	RES,CHIP	22K	5%	1/16W	
R2743	1-218-965-11	RES,CHIP	10K	5%	1/16W	
R2744	1-218-965-11	RES,CHIP	10K	5%	1/16W	
R2747	1-218-949-11	RES,CHIP	470	5%	1/16W	
R2748	1-218-942-11	RES,CHIP	120	5%	1/16W	
R2749	1-218-942-11	RES,CHIP	120	5%	1/16W	
R2750	1-218-956-11	RES,CHIP	1.8K	5%	1/16W	
R2751	1-218-973-11	RES,CHIP	47K	5%	1/16W	
R2752	1-218-948-11	RES,CHIP	390	0.50%	1/16W	
R2753	1-208-671-11	RES,CHIP	330	0.50%	1/16W	
R2754	1-208-671-11	RES,CHIP	330	0.50%	1/16W	
R2755	1-218-948-11	RES,CHIP	390	0.50%	1/16W	
R2756	1-218-956-11	RES,CHIP	1.8K	5%	1/16W	
R2757	1-218-963-11	RES,CHIP	6.8K	5%	1/16W	
R2758	1-218-969-11	RES,CHIP	22K	5%	1/16W	
R2759	1-218-966-11	RES,CHIP	12K	5%	1/16W	
R2760	1-218-963-11	RES,CHIP	6.8K	5%	1/16W	
R2761	1-218-965-11	RES,CHIP	10K	5%	1/16W	
R2765	1-218-947-11	RES,CHIP	330	5%	1/16W	
R2766	1-218-959-11	RES,CHIP	3.3K	5%	1/16W	
R2767	1-218-948-11	RES,CHIP	390	5%	1/16W	
R2768	1-218-957-11	RES,CHIP	2.2K	5%	1/16W	
R2769	1-218-959-11	RES,CHIP	3.3K	5%	1/16W	
R2770	1-218-947-11	RES,CHIP	330	5%	1/16W	
R2817	1-218-957-11	RES,CHIP	2.2K	5%	1/16W	
R2818	1-218-942-11	RES,CHIP	120	5%	1/16W	
R2819	1-218-942-11	RES,CHIP	120	5%	1/16W	
R2820	1-218-939-11	RES,CHIP	68	5%	1/16W	
R2821	1-218-965-11	RES,CHIP	10K	5%	1/16W	
R2822	1-218-939-11	RES,CHIP	68	5%	1/16W	
R2823	1-218-965-11	RES,CHIP	10K	5%	1/16W	
R2824	1-218-961-11	RES,CHIP	4.7K	5%	1/16W	
R3100	1-218-985-11	RES,CHIP	470K	5%	1/16W	
R3101	1-218-985-11	RES,CHIP	470K	5%	1/16W	
R3102	1-218-985-11	RES,CHIP	470K	5%	1/16W	
R3103	1-218-985-11	RES,CHIP	470K	5%	1/16W	
R3104	1-218-990-11	SHORT	0			
R3107	1-218-990-11	SHORT	0			
R3109	1-218-985-11	RES,CHIP	470K	5%	1/16W	
R3110	1-218-977-11	RES,CHIP	100K	5%	1/16W	
R3111	1-218-977-11	RES,CHIP	100K	5%	1/16W	
R3112	1-218-953-11	RES,CHIP	1K	5%	1/16W	
R3117	1-208-927-11	RES,CHIP	47K	0.50%	1/16W	

Ref. No.	Part No.	Description			Remarks
R3118	1-218-953-11	RES,CHIP	1K	5%	1/16W
R3119	1-208-943-11	RES,CHIP	220K	0.50%	1/16W
R3120	1-218-961-11	RES,CHIP	4.7K	5%	1/16W
R3122	1-218-971-11	RES,CHIP	33K	5%	1/16W
R3123	1-218-979-11	RES,CHIP	150K	5%	1/16W
R3124	1-218-963-11	RES,CHIP	6.8K	5%	1/16W
R3125	1-208-939-11	RES,CHIP	150K	0.50%	1/16W
R3126	1-208-707-11	RES,CHIP	10K	0.50%	1/16W
R3127	1-218-965-11	RES,CHIP	10K	5%	1/16W
R3128	1-218-965-11	RES,CHIP	10K	5%	1/16W
R3129	1-218-965-11	RES,CHIP	10K	5%	1/16W
R3130	1-218-978-11	RES,CHIP	120K	0.50%	1/16W
R3131	1-208-953-11	RES,CHIP	560K	0.50%	1/16W
R3132	1-218-953-11	RES,CHIP	1K	5%	1/16W
R3133	1-208-715-11	RES,CHIP	22K	0.50%	1/16W
R3134	1-208-721-11	RES,CHIP	39K	0.50%	1/16W
R3138	1-218-965-11	RES,CHIP	10K	5%	1/16W
R3139	1-218-965-11	RES,CHIP	10K	5%	1/16W
R3140	1-208-707-11	RES,CHIP	10K	0.50%	1/16W
R3141	1-217-671-11	METAL CHIP	1	5%	1/10W
R3142	1-217-671-11	METAL CHIP	1	5%	1/10W
R3143	1-218-965-11	RES,CHIP	10K	5%	1/16W
R3144	1-208-935-11	RES,CHIP	100K	0.50%	1/16W
R3145	1-218-989-11	RES,CHIP	1M	5%	1/16W
R3146	1-218-941-11	RES,CHIP	100	5%	1/16W
R3147	1-218-941-11	RES,CHIP	100	5%	1/16W
R3148	1-218-941-11	RES,CHIP	100	5%	1/16W
R3149	1-218-971-11	RES,CHIP	33K	5%	1/16W
R3150	1-218-957-11	RES,CHIP	2.2K	5%	1/16W
R3151	1-218-965-11	RES,CHIP	10K	5%	1/16W
R3152	1-218-965-11	RES,CHIP	10K	5%	1/16W
R3153	1-218-969-11	RES,CHIP	22K	5%	1/16W
R3154	1-217-671-11	METAL CHIP	1	5%	1/10W
R3155	1-217-671-11	METAL CHIP	1	5%	1/10W
R3156	1-217-671-11	METAL CHIP	1	5%	1/10W
R3157	1-217-671-11	METAL CHIP	1	5%	1/10W
R3158	1-218-959-11	RES,CHIP	3.3K	5%	1/16W
R3159	1-217-671-11	METAL CHIP	1	5%	1/10W
R3160	1-217-671-11	METAL CHIP	1	5%	1/10W
R3161	1-217-671-11	METAL CHIP	1	5%	1/10W
R3162	1-217-671-11	METAL CHIP	1	5%	1/10W
R3163	1-218-940-11	RES,CHIP	82	5%	1/16W
R3164	1-218-961-11	RES,CHIP	4.7K	5%	1/16W
R3165	1-218-965-11	RES,CHIP	10K	5%	1/16W
R3166	1-218-941-11	RES,CHIP	100	5%	1/16W
R3167	1-218-953-11	RES,CHIP	1K	5%	1/16W
R3168	1-218-977-11	RES,CHIP	100K	5%	1/16W
R3169	1-218-977-11	RES,CHIP	100K	5%	1/16W
R3173	1-218-959-11	RES,CHIP	3.3K	5%	1/16W
R3174	1-218-963-11	RES,CHIP	6.8K	5%	1/16W
R3175	1-218-963-11	RES,CHIP	6.8K	5%	1/16W
R3176	1-208-721-11	RES,CHIP	39K	0.50%	1/16W
R3177	1-218-970-11	RES,CHIP	27K	5%	1/16W
R3178	1-218-967-11	RES,CHIP	15K	5%	1/16W
R3179	1-218-949-11	RES,CHIP	470	5%	1/16W
R3180	1-218-990-11	SHORT	0		
R3500	1-218-989-11	RES,CHIP	1M	5%	1/16W
R3501	1-218-977-11	RES,CHIP	100K	5%	1/16W
R3502	1-218-953-11	RES,CHIP	1K	5%	1/16W
R3528	1-218-965-11	RES,CHIP	10K	5%	1/16W

Ref. No.	Part No.	Description			Remarks
R3529	1-218-965-11	RES,CHIP	10K	5%	1/16W
R3530	1-218-953-11	RES,CHIP	1K	5%	1/16W
R3531	1-218-977-11	RES,CHIP	100K	5%	1/16W
R3532	1-218-977-11	RES,CHIP	100K	5%	1/16W
R3533	1-218-977-11	RES,CHIP	100K	5%	1/16W
R3534	1-218-965-11	RES,CHIP	10K	5%	1/16W
R3535	1-218-965-11	RES,CHIP	10K	5%	1/16W
R3538	1-208-709-11	RES,CHIP	12K	0.50%	1/16W
R3539	1-208-709-11	RES,CHIP	12K	0.50%	1/16W
R3540	1-218-990-11	SHORT	0		
R3541	1-208-707-11	RES,CHIP	10K	0.50%	1/16W
R3542	1-208-707-11	RES,CHIP	10K	0.50%	1/16W
R3543	1-218-938-11	RES,CHIP	56	0.50%	1/16W
R3544	1-218-938-11	RES,CHIP	56	0.50%	1/16W
R3545	1-218-938-11	RES,CHIP	56	0.50%	1/16W
R3546	1-218-938-11	RES,CHIP	56	0.50%	1/16W
R3556	1-218-965-11	RES,CHIP	10K	5%	1/16W
R3557	1-218-965-11	RES,CHIP	10K	5%	1/16W
R3560	1-218-990-11	SHORT	0		
R3561	1-218-977-11	RES,CHIP	100K	5%	1/16W
R3562	1-218-977-11	RES,CHIP	100K	5%	1/16W
R3563	1-218-990-11	SHORT	0		
R6100	1-218-965-11	RES,CHIP	10K	5%	1/16W
R6101	1-218-965-11	RES,CHIP	10K	5%	1/16W
R6102	1-218-957-11	RES,CHIP	2.2K	5%	1/16W
R6103	1-218-946-11	RES,CHIP	270	5%	1/16W
R6104	1-218-941-11	RES,CHIP	100	5%	1/16W
R6105	1-218-953-11	RES,CHIP	1K	5%	1/16W
R6107	1-218-977-11	RES,CHIP	100K	5%	1/16W
R6111	1-218-953-11	RES,CHIP	1K	5%	1/16W
R6112	1-218-953-11	RES,CHIP	1K	5%	1/16W
R6113	1-218-953-11	RES,CHIP	1K	5%	1/16W
R6114	1-218-953-11	RES,CHIP	1K	5%	1/16W
R6115	1-218-953-11	RES,CHIP	1K	5%	1/16W
R6116	1-218-953-11	RES,CHIP	1K	5%	1/16W
R6117	1-218-953-11	RES,CHIP	1K	5%	1/16W
R6118	1-218-990-11	SHORT	0		
R7901	1-218-977-11	RES,CHIP	100K	5%	1/16W
R7902	1-218-989-11	RES,CHIP	1M	5%	1/16W
R7903	1-218-947-11	RES,CHIP	330	5%	1/16W
R7904	1-218-977-11	RES,CHIP	100K	5%	1/16W
R7905	1-218-973-11	RES,CHIP	47K	5%	1/16W
R7906	1-218-965-11	RES,CHIP	10K	5%	1/16W
R7907	1-218-973-11	RES,CHIP	47K	5%	1/16W
R7908	1-218-973-11	RES,CHIP	47K	5%	1/16W
R7909	1-218-973-11	RES,CHIP	47K	5%	1/16W
R7910	1-218-973-11	RES,CHIP	47K	5%	1/16W
R7911	1-218-974-11	RES,CHIP	56K	5%	1/16W
R7912	1-218-990-11	SHORT	0		
R7918	1-218-990-11	SHORT	0		
R7919	1-218-973-11	RES,CHIP	47K	5%	1/16W
R7920	1-218-970-11	RES,CHIP	27K	5%	1/16W
R7922	1-218-990-11	SHORT	0		
R7923	1-218-990-11	SHORT	0		
R7924	1-218-990-11	SHORT	0		
R7925	1-218-990-11	SHORT	0		
R7926	1-218-990-11	SHORT	0		
R7933	1-218-990-11	SHORT	0		
R7934	1-218-990-11	SHORT	0		
R7935	1-218-965-11	RES,CHIP	10K	5%	1/16W

RJ-77

Ref. No.	Part No.	Description			Remarks
R7938	1-218-945-11	RES,CHIP	220	5%	1/16W
R7939	1-218-977-11	RES,CHIP	100K	5%	1/16W
R7940	1-218-990-11	SHORT	0		
R7942	1-218-990-11	SHORT	0		
R7943	1-218-990-11	SHORT	0		
R7944	1-218-973-11	RES,CHIP	47K	5%	1/16W
		< VIBRATOR >			
X1900	1-767-449-11	VIBRATOR, CRYSTAL (27MHz)			
X3100	1-760-655-41	VIBRATOR, CRYSTAL (20MHz)			
X3500	1-760-497-21	VIBRATOR, LITHIUM NIOBATE (6MHz)			
X7901	1-767-399-11	VIBRATOR, CRYSTAL (24.576MHz)			
		MISCELLANEOUS			
		**********			
6	1-694-076-11	TERMINAL BOARD, BATTERY			
52	1-958-004-11	HARNESS (EP-51) (D900/D900E)			
58,124	1-667-398-11	FP-569 FLEXIBLE BOARD (D900/D900E)			
64,123	1-669-797-11	FP-602 FLEXIBLE BOARD			
67	1-667-404-11	FP-575 FLEXIBLE BOARD			
68	1-667-401-11	FP-572 FLEXIBLE BOARD			
72	1-669-793-11	FP-598 FLEXIBLE BOARD			
75,103	1-667-399-11	FP-570 FLEXIBLE BOARD			
80	1-761-030-11	D5104 BOARD, MOUNT (D900/D900E)			
105	1-669-794-11	FP-599 FLEXIBLE BOARD (D300/D900)			
121	1-475-383-61	SWITCH BLOCK, CONTROL (FK-71)			
122	1-665-526-11	FP-538 FLEXIBLE BOARD			
807	1-666-102-11	FP-586 FLEXIBLE BOARD			
874	1-666-101-11	FP-585 FLEXIBLE BOARD			
BZ901	1-529-107-11	BUZZER, PIEZOELECTRIC (D300/D300E)			
FAN1	1-763-122-11	FAN, DC			
LCD1	1-801-904-24	MODULE, CRYSTAL INDICATION (D900/D900E)			
M901	A-7048-874-A	DRUM ASSY (DEH-11A-R)			
M902	8-835-524-01	MOTOR, DC SCD-0101A			
M903	A-7010-673-A	ASSY, LM MOTOR			
⚠ND901	1-517-719-11	TUBE, FLUORESCENT, COLD CATHODE			
SP901	1-504-753-21	SPEAKER (2.8CM) (D900/D900E)			

Ref. No.	Part No.	Description	Remarks
		ACCESSORIES	
		**********	
⚠	A-7093-628-A	AC-V700 AC ADAPTOR/CHARGER (D300E/D900E)	
⚠	A-7093-627-A	AC-V700 AC ADAPTOR/CHARGER (D300/D900)	
⚠	1-569-008-21	ADAPTOR, CONVERSION 2P (D300E:E/D900E:E)	
	1-575-334-11	AV CONNECTING CABLE (1.5m)	
	1-575-335-21	S VIDEO CABLE (1.5m)	
⚠	1-769-608-11	CORD, POWER (D300E/D900E)	
⚠	1-770-019-11	ADAPTOR, CONVERSION PLUG 3P (D300E:UK/D900E:UK)	
	1-770-783-11	CONNECTOR, CONVERSION 21P (D300E:AEP,UK/D900E:AEP,UK)	
⚠	1-775-549-21	CORD, POWER (D300/D900)	
	1-782-361-11	CODE, CONNECTION (DK-415)	
	1-783-728-11	CORD, CONNECTION (DV CABLE)(1.8m)	
	3-862-371-11	MANUAL, INSTRUCTION (ENGLISH, SPANISH) (D900)	
	3-862-371-21	MANUAL, INSTRUCTION (FRENCH) (D900)	
	3-862-371-31	MANUAL, INSTRUCTION (CHINESE) (D900)	
	3-862-391-11	MANUAL, INSTRUCTION (ENGLISH, SPANISH) (D300)	
	3-862-391-21	MANUAL, INSTRUCTION (FRENCH) (D900)	
	3-862-391-31	MANUAL, INSTRUCTION (CHINESE) (D900)	
	3-862-706-11	MANUAL, INSTRUCTION (ENGLISH, RUSSIAN) (D900E:AEP,UK)	
	3-862-706-21	MANUAL, INSTRUCTION (SPANISH, PORTUGUESE) (D900E:AEP)	
	3-862-706-31	MANUAL, INSTRUCTION (FRENCH, DUTCH) (D900E:AEP)	
	3-862-706-41	MANUAL, INSTRUCTION (GERMAN, ITALIAN) (D900E:AEP)	
	3-862-706-51	MANUAL, INSTRUCTION (ENGLISH, RUSSIAN) (D900E:E)	
	3-862-706-61	MANUAL, INSTRUCTION (FRENCH, GERMAN) (D900E:E)	
	3-862-706-71	MANUAL, INSTRUCTION (ARABIC, PERSIAN) (D900E:E)	
	3-862-706-81	MANUAL, INSTRUCTION (CHINESE) (D900E:E)	
	3-862-707-11	MANUAL, INSTRUCTION (ENGLISH, RUSSIAN) (D300E:AEP,UK)	
	3-862-707-21	MANUAL, INSTRUCTION (SPANISH, PORTUGUESE) (D300E:AEP)	
	3-862-707-31	MANUAL, INSTRUCTION (FRENCH, DUTCH) (D300E:AEP)	
	3-862-707-41	MANUAL, INSTRUCTION (GERMAN, ITALIAN) (D300E:AEP)	
	3-862-707-51	MANUAL, INSTRUCTION (ENGLISH, RUSSIAN) (D300E:E)	
	3-862-707-61	MANUAL, INSTRUCTION (FRENCH, DUTCH) (D300E:E)	
	3-862-707-71	MANUAL, INSTRUCTION (ARABIC, PERSIAN) (D300E:E)	
	3-862-707-81	MANUAL, INSTRUCTION (CHINESE) (D300E:E)	
	3-987-015-01	STRAP, SHOULDER	

Note :	**Note :**
The components identified by mark ⚠ or dotted line with mark ⚠ are critical for safety. Replace only with part number specified.	Les composants identifiés par une marque ⚠ sont critiques pour la sécurité. Ne les remplacer que par une pièce portant le numéro spécifié.

〈PARTS REFERENCE SHEET〉

You can find the parts position of location of mount locations applying to CB-61 board of a set.

CB-61 GV-D300/D300E/D900/D900E SIDE A

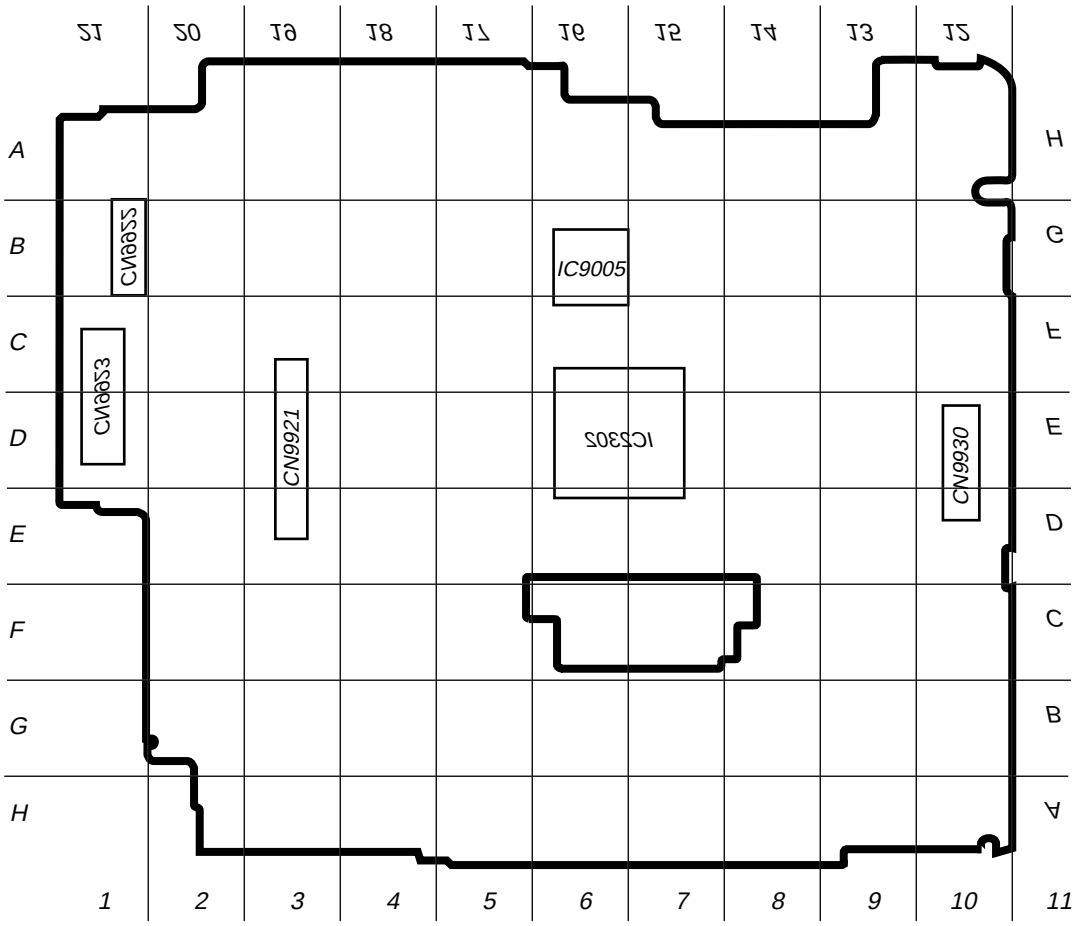

SIDE B GV-D300\D300E\D900\D900E **CB-61**

〈PARTS REFERENCE SHEET〉

You can find the parts position of location of mount locations applying to RJ-77 board of a set.

RJ-77 GV-D300/D300E/D900/D900E SIDE A

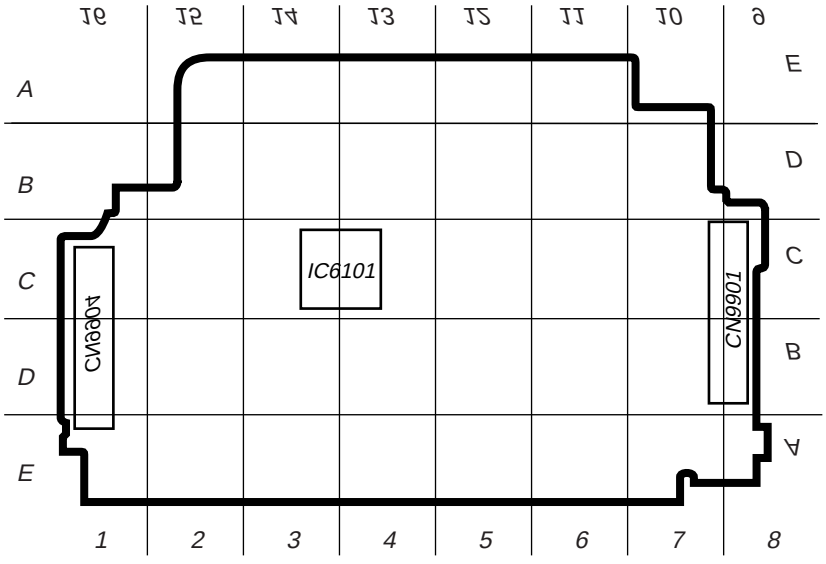

SIDE B GV-D300\D300E\D900\D900E **RJ-77**

2003F1600-1
©2003.6
Published by DI CS Strategy Div.

GV-D300/D300E/D900/D900E

SERVICE MANUAL

1998. 09

US Model
Canadian Model
GV-D300/D900
AEP Model
UK Model
E Model
GV-D300E/D900E

SUPPLEMENT-1

File this supplement-1 with the Service Manual.
(EV802326, 98-017)

- Change of adjustment data
- Part policy change to supply LCD block and suffix no. change

: Changed

Page 5-7

3. D Page Table

Address	Initial value NTSC	Initial value PAL	Remark
22			
23			
24	Fixed data-2		
25			
26			
27			

Page 5-8

Address	Initial value NTSC	Initial value PAL	Remark
60	75	96	Hue adj. (LCD)
61	71	76	White balance adj. (LCD)
62	71	76	
63	74	7F	Contrast adj. (LCD)
64	CA	CA	Panel –19V adj.
65	8E	86	V-COM adj. (LCD)
66	Fixed data-2		
67			
68	5E	6A	H position adj. (LCD)
69	Fixed data-1		
6A	Fixed data-2		
6B			
6C	7E	7A	Bright adj. (LCD)
6D	8E	6E	Color adj. (LCD)

<Page 6-2>

6-1-2. LCD WINDOW CABINET, CABINET (UPPER) ASSEMBLY

The components identified by mark ⚠ or dotted line with mark ⚠ are critical for safety.
Replace only with part number specified.

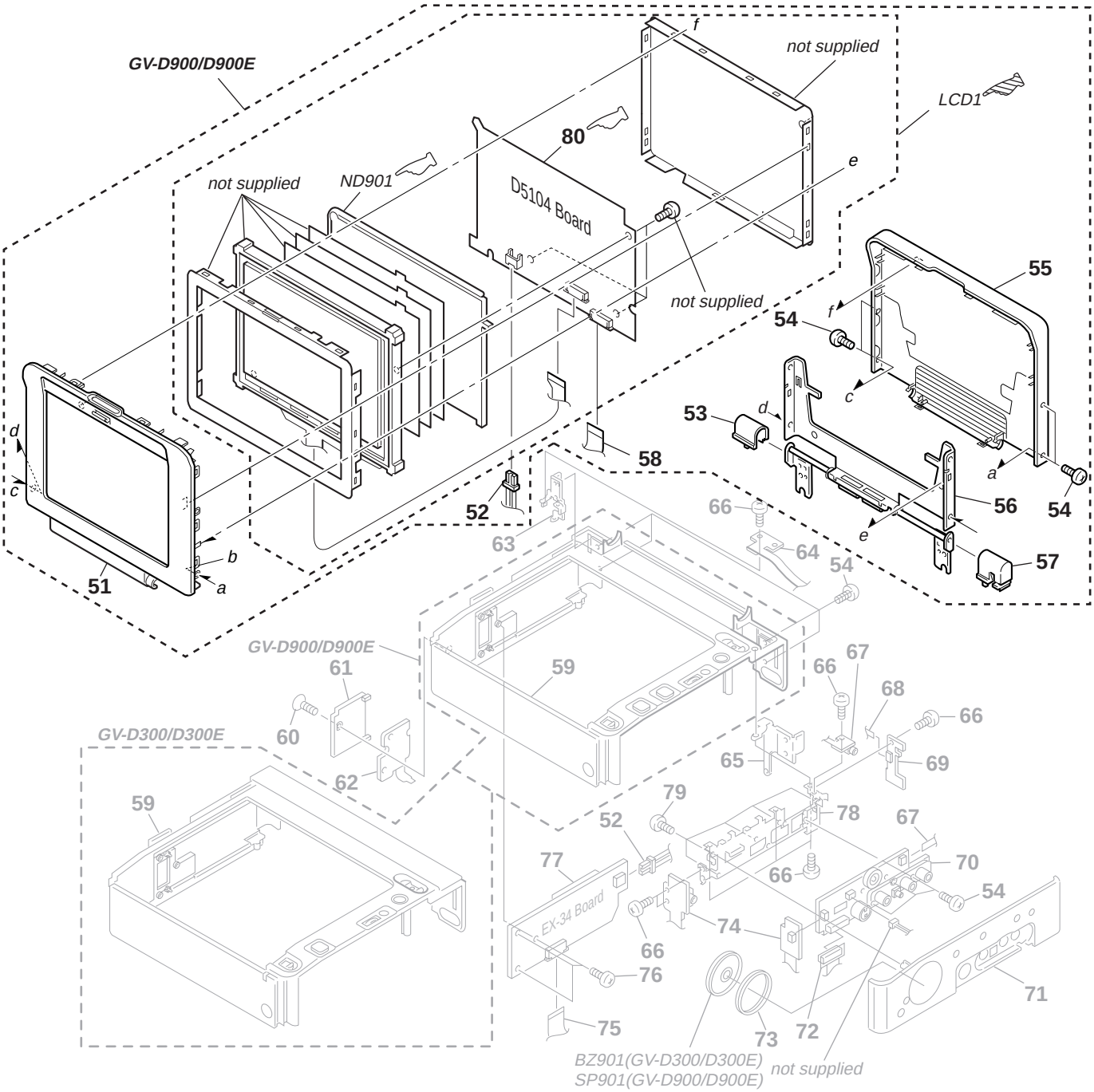

: Added , : Changed

Page	INCORRECT				CORRECT			
	Ref. No.	Part No.	Description	Remarks	Ref. No.	Part No.	Description	Remarks
6-2, 6-30E	LCD-1	1-801-904-21	MODULE, CRYSTAL INDICATION (D900/D900E)		LCD-1	1-801-904-24	MODULE, CRYSTAL INDICATION (D900/D900E)	
					80	1-761-030-11	D5104 BOARD, MOUNT (D900/D900E)	
					⚠ ND901	1-517-719-11	TUBE, FLUORESCENT, COLD CATHODE (D900/D900E)	

98I1668-1
Printed in Japan ©1998.9
Published by Quality Engineering Dept.
(Osaki East)

GV-D300/D300E/D900/D900E

SONY

SERVICE MANUAL

1998.11

US Model
Canadian Model
GV-D300/D900
AEP Model
UK Model
E Model
GV-D300E/D900E

SUPPLEMENT-2

File this supplement-2 with the Service Manual.
(EV803735, EV803850)

- Addition of the Timer Circuit to the EX-34 Board.
- Change of Accessories.

The timer circuit (IC203) is added to the EX-34 board.
Replace or correct the corresponding pages of your service manual.

Target Serial Number List

Model	Destination	Serial No.
GV-D900	US, Canadian	15923 and higher
GV-D900E	AEP, UK	12472 and higher
GV-D900E	E	12572 and higher

- BLOCK DIAGRAMS
- EX-34 PRINTED WIRING BOARD
- EX-34 SCHEMATIC DIAGRAM
- EX-34 ELECTRICAL PARTS LIST

3. BLOCK DIAGRAMS

[PAGE 3-3]

3-1. OVERALL BLOCK DIAGRAM (1)

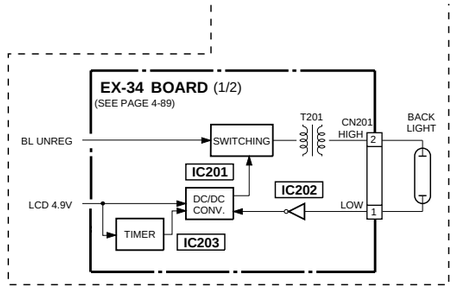

[PAGE 3-8]

3-3. POWER BLOCK DIAGRAM

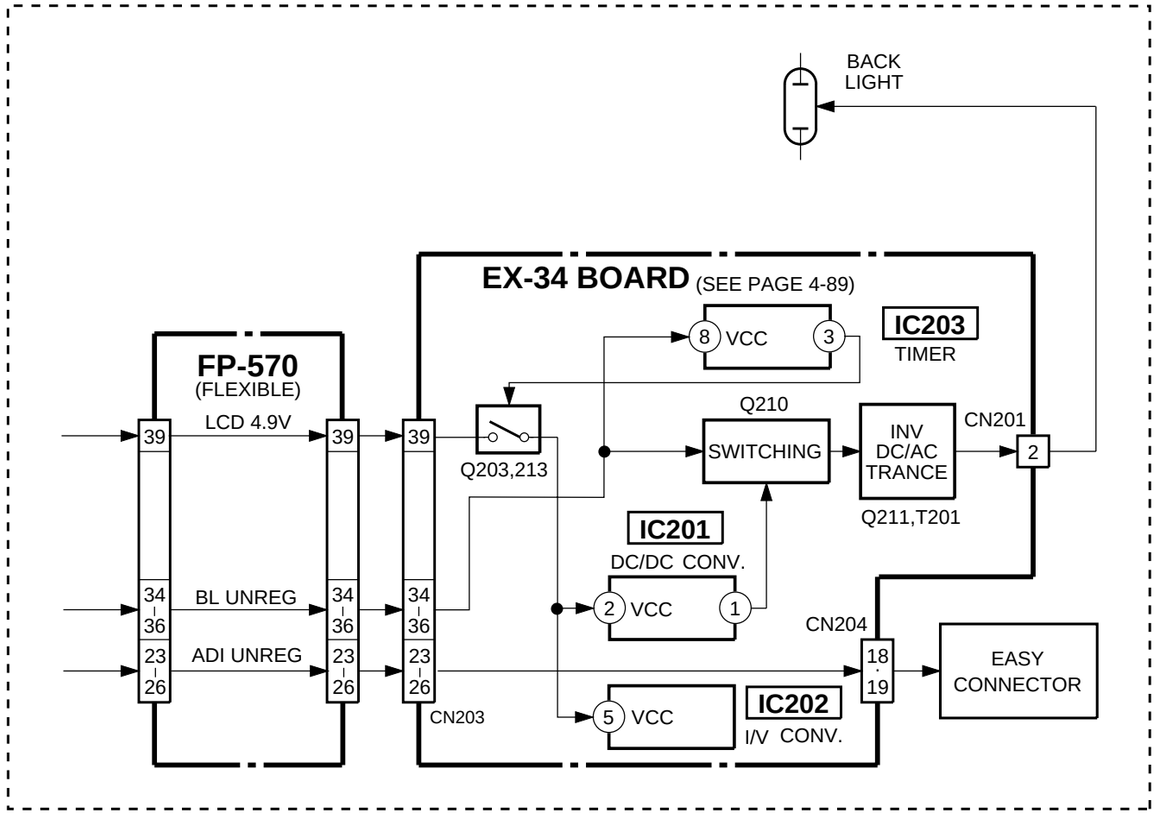

[PAGE 4-93]

PRINTED WIRING BOARD

EX-34 (MULTI CONNECTOR, BACK LIGHT POWER) PRINTED WIRING BOARD

— Ref. No. EX-34 Board; 3,000 Series —

EX-34 BOARD

C201	A-6	Q207	E-5
C202	F-5	Q208	E-5
C203	F-5	Q209	F-4
C204	F-5	Q210	E-3
C205	A-6	Q211	E-4
C206	A-5	Q212	E-5
C207	A-4	Q213	E-5
C208	F-4	Q214	F-6
C209	F-5	Q215	F-6
C210	F-4	Q216	F-5
C211	B-4	Q217	F-6
C212	B-4	Q218	F-6
C213	B-3		
C214	B-2	R201	A-6
C215	B-2	R202	A-6
C216	B-1	R203	F-5
C219	E-5	R204	B-4
C220	D-3	R205	A-5
C221	F-6	R206	E-5
C222	F-5	R207	F-5
C223	F-5	R208	E-5
C224	F-5	R209	E-5
C225	F-5	R210	F-5
C226	F-6	R211	E-5
C227	F-6	R212	E-5
		R213	B-5
CN201	B-1	R214	B-5
CN203	D-5	R215	B-5
CN204	B-7	R216	F-5
		R217	F-5
D202	F-5	R218	F-5
D203	E-5	R219	E-5
D204	E-6	R220	B-5
D205	E-5	R222	E-5
D206	F-6	R223	F-4
		R224	F-4
IC201	A-5	R225	F-4
IC202	B-5	R227	A-4
IC203	F-6	R228	F-6
		R229	F-5
L201	B-5	R230	F-6
L202	B-3	R231	F-6
L203	B-4	R232	F-6
		R233	E-5
Q201	F-5	R234	E-5
Q202	F-6	R235	F-6
Q203	E-5	R236	F-6
Q204	E-5	R237	F-5
Q205	E-5		
Q206	E-5	T201	A-3

EX-34 BOARD (SIDE A)

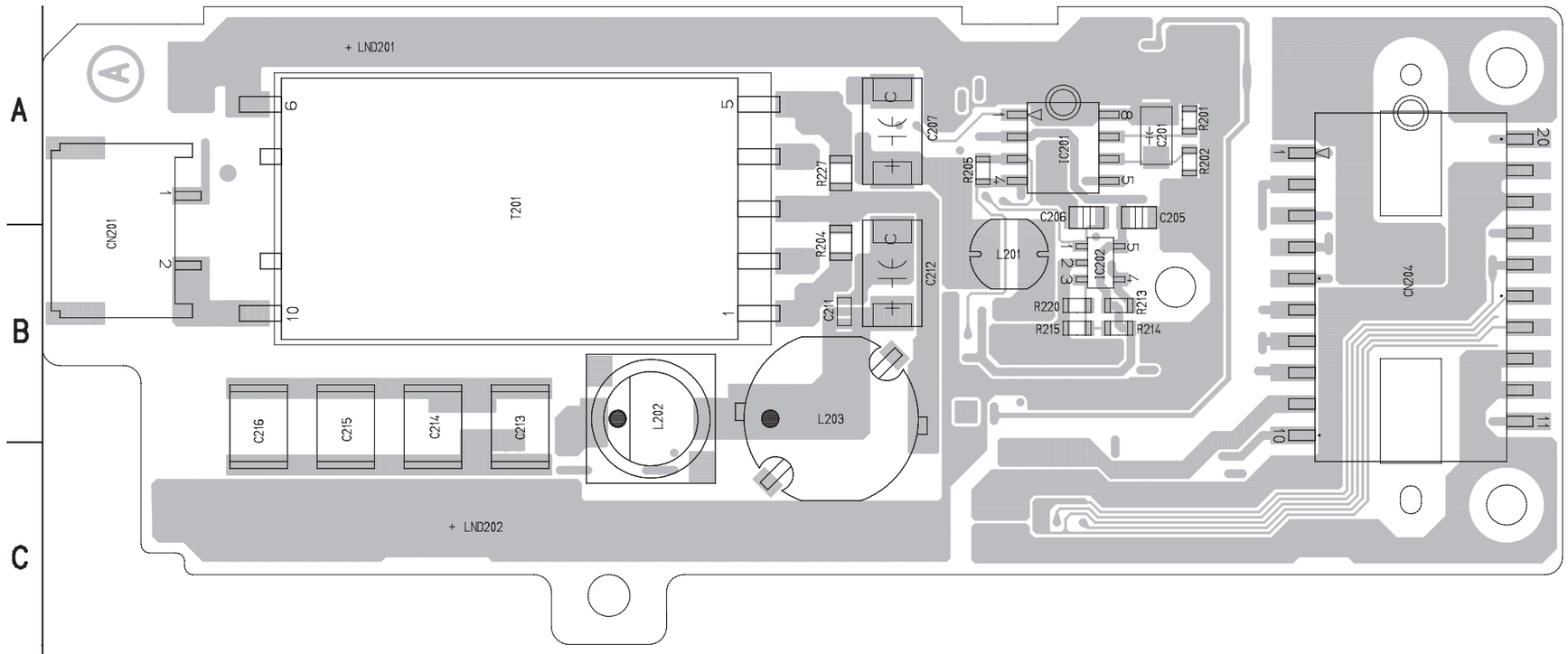

EX-34 BOARD (SIDE B)

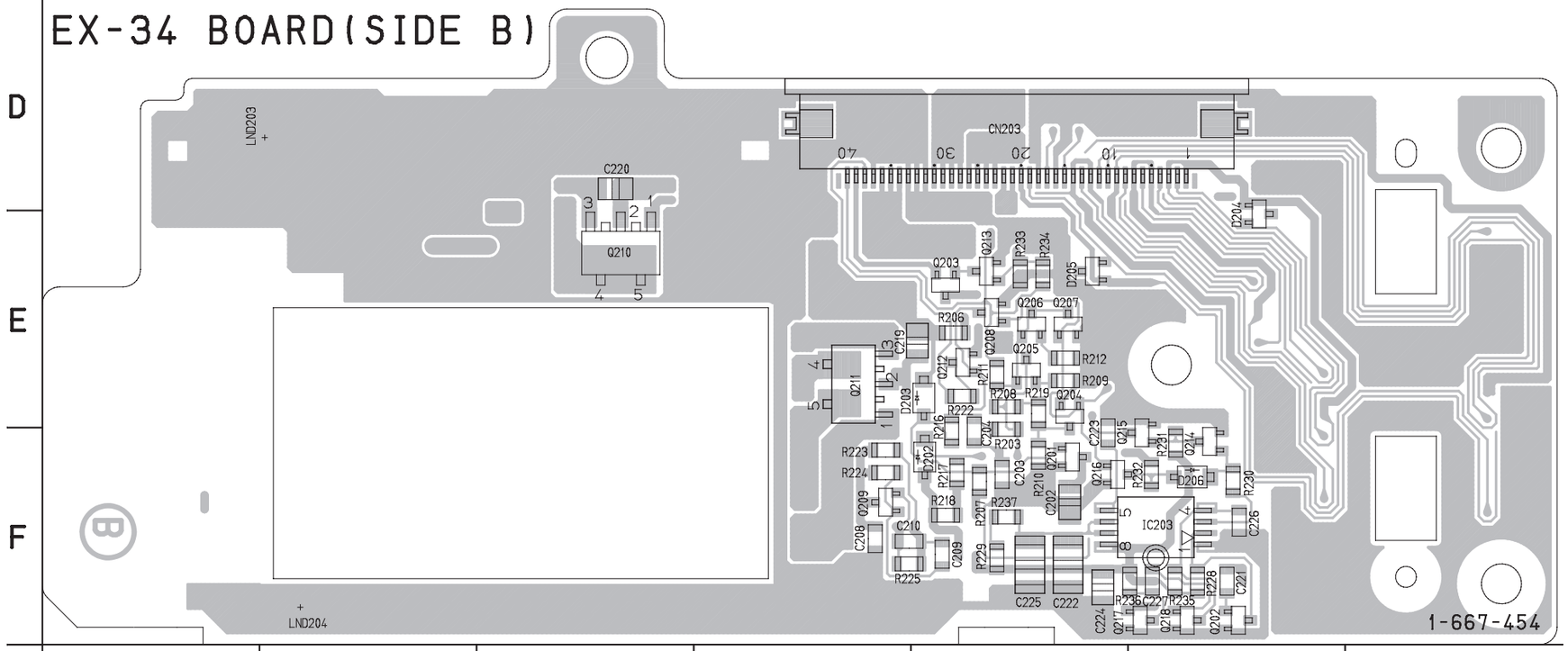

For printed wiring boards

There are few cases that the part printed on this diagram isn't mounted in this model.

[PAGE 4-89]

SCHEMATIC DIAGRAM

EX-34 BOARD
DC/DC CONNECTOR
-REF. NO. :3000 SERIES-
XX MARK:NO MOUNT

NO MARK:REC/PB MODE
R :REC MODE
P :PB MODE

5.5INCH LCD MODEL+GV-D900/D900E

EASY CONNECTOR

CN204 20P
VIDEO_OUT
VIDEO_OUT_GND
V/Y_IN
VIDEO_IN_GND
AUDIO_R_IN
AUDIO_L_IN
AUDIO_IN_GND
LANC_SIG
IO_GND
LANC_GND
ID1
ADI_GND
ADI_GND
AUDIO_R_OUT
AUDIO_L_OUT
AUDIO_OUT_GND
ID2
ADI_UNREG
ADI_UNREG
C_IN

D204 01ZA8.2(TPL3)
D205 01ZA8.2(TPL3)

CN203 40P
VIDEO_GND
V/Y_IN
V/Y_IN_GND
AUDIO_R_IN
AUDIO_R_IN_GND
AUDIO_L_IN
AUDIO_L_IN_GND
LANC_SIG
LANC_GND
ID1
ID2
VIDEO_GND
VIDEO_OUT
VIDEO_OUT_GND
AUDIO_R_OUT
AUDIO_R_OUT_GND
AUDIO_L_OUT
AUDIO_L_OUT_GND
C_IN
VIDEO_GND
IO_GND
IO_GND
ADI_UNREG
ADI_UNREG
ADI_UNREG
ADI_UNREG
ADI_GND
ADI_GND
ADI_GND
ADI_GND
BL_GND
BL_GND
BL_GND
BL_UNREG
BL_UNREG
BL_UNREG
LEL
LEH
LCD_4.9V
BL_LEV

FP-570 FLEXIBLE
40P
VIDEO_GND
V/Y_IN
V/Y_IN_GND
AUDIO_R_IN
AUDIO_R_IN_GND
AUDIO_L_IN
AUDIO_L_IN_GND
LANC_SIG
LANC_GND
ID1
ID2
VIDEO_GND
VIDEO_OUT
VIDEO_OUT_GND
AUDIO_R_OUT
AUDIO_OUT_GND
AUDIO_L_OUT
AUDIO_OUT_GND
C_IN
VIDEO_GND
IO_GND
IO_GND
ADI_UNREG
ADI_UNREG
ADI_UNREG
ADI_UNREG
ADI_GND
ADI_GND
ADI_GND
ADI_GND
BL_GND
BL_GND
BL_GND
BL_UNREG
BL_UNREG
BL_UNREG
LEL
LEH
LCD_4.9V
BL_LEV

TO CD-61 BOARD16/10) CN0931 (SEE PAGE 4-29)

L201 4.7uH
C208 0.01u
R223 470
C207 22u 16V TA C
R224 22k
C209 18p CH
R225 390
C210 270 CH
Q210 FP102-TL SWITCHING
L202 22uH
L203 100uH
C220 0.47u B 2012
C219 0.47u 2012
C211 0.01u 1608
C212 47u 16V TA C
R227 270 2012 1/10W
R204 270 2012 1/10W
T201
C216 0.1u
C213 0.1u
C214 0.1u
C215 0.1u
Q211 FP211-TL HV OSC

LND201 SHIELD_GND
LND202 SHIELD_GND
LND203 SHIELD_GND
LND204 SHIELD_GND

D203 MA111-TX
R216 XX
R207 47k
R206 680Ω ±0.5%
IC201 SWITCHING CONTROL
R205 120k ±0.5%
C204 0.01u B
R203 4700
C203 0.022u B
R208 1500 ±0.5%
R219 120 ±0.5%
R213 4700
R214 100k
Q212 UN9111J-(K8).SO SWITCH
R222 120
Q208 UN9213J-(K8).SO SWITCH
D202 MA111-TX
R215 10k
R220 XX
R217 22k
C206 0.1u B
R218 470 2012

Q203 UN9113J-(K8).SO +B SWITCH
Q213 2SD2216J-QR(TX).SO +B ON/OFF SWITCH
R234 220k
R233 47k
C205 1u 2012
IC201 TL3001CDR
Q201 UN9213J-(K8).SO DISCHARGE SWITCH
R201 6800 ±0.5%
R202 27k ±0.5%
C201 2.2u 10V TA A
C202 1u F 2012
Q204 UN9213J-(K8).SO SWITCH
R210 2700 ±0.5%
R209 1500
R211 4700
R212 1500
Q205 2SD2216J-QR(TX).SO
Q205-207 CURRENT LIMITTER
Q207 UN9213J-(K8).SO
IC202 I/V CONVERTER
IC202 TA75S393F-TE85R

IC203 TIMER
R235 10k
R239 1M
R236 220k
R237 1M
R238 10k
C227 0.01u B
C222 4.7u B 3216
IC203 NJM555V(TE2)
C223 0.01u B
C224 0.47u B 2012
R231 47k
R232 47k
Q215 UN9213J-(K8).SO SWITCH
Q206 MA111-TX
R228 220k
Q217 UN9213J-(K8).SO INV.
Q202 UN9213J-(K8).SO INV.
Q218 UN9213J-(K8).SO INV.
Q214 2SD2216J-QR(TX).SO INV.
R230 47k
C225 4.7u B 3216
C226 0.01u B
Q216 UN9213J-(K8).SO

5.5INCH LCD MODEL

FP-569 FLEXIBLE
26P
LEH(COMP)
LEL/H.POS
GND
VR
VG
VB
GND
GND
V_COMP(P_COM)
N/PB(NTSC)
FPR(FPRV)
HDB(HSV)
VDB
GVD/PIS
WHB/MUT
CSYNC(SYNC)
VRV(V_REV)
HRV(H_REV)
W_MODE
W_MSK
GND
VPH
VDD
VSL
VGH
VGL
32P

5.5-inch LCD

ND201 BACK LIGHT
CN201
2P
BL_HIGH
BL_LOW

EP-51 HARNNES

TO CB-61 BOARD(8/10) CN0923
(SEE PAGE 4-28)

Note:
The components identified by mark ⚠ or dotted line with mark ⚠ are critical for safety. Replace only with part number specified.

Note:
Les composants identifiés par une marque ⚠ sont critiques pour la sécurité. Ne les remplacer que par une pièce portant le numéro spécifié.

•SIGNAL PATH

	VIDEO SIGNAL			AUDIO SIGNAL
	CHROMA	Y	Y/CHROMA	
REC	→	→	⇉	→
PB			⇉	⇨

6. REPAIR PARTS LIST

6-2. ELECTRICAL PARTS LIST

EX-34 BOARD (D900/D900E MODEL)

EX-34

Ref. No.	Part No.	Description				Remarks
	A-7073-553-B	EX-34 BOARD, COMPLETE				
		**********				
						(Ref.No.: 3,000 Series)
		< CAPACITOR >				
C201	1-135-149-21	TANTALUM CHIP	2.2uF	20%	10V	
C202	1-109-982-11	CERAMIC CHIP	1uF	10%	10V	
C203	1-164-227-11	CERAMIC CHIP	0.022uF	10%	25V	
C204	1-162-970-11	CERAMIC CHIP	0.01uF	10%	25V	
C205	1-109-982-11	CERAMIC CHIP	1uF	10%	10V	
C206	1-164-004-11	CERAMIC CHIP	0.1uF	10%	25V	
C207	1-113-981-11	TANTAL. CHIP	22uF	20%	20V	
C208	1-162-974-11	CERAMIC CHIP	0.01uF		50V	
C209	1-162-918-11	CERAMIC CHIP	18PF	5%	50V	
C210	1-162-920-11	CERAMIC CHIP	27PF	5%	50V	
C211	1-162-974-11	CERAMIC CHIP	0.01uF		50V	
C212	1-113-642-11	TANTAL. CHIP	47uF	20%	10V	
C213	1-117-749-11	FILM CHIP	0.1uF	20%	50V	
C214	1-117-749-11	FILM CHIP	0.1uF	20%	50V	
C215	1-117-749-11	FILM CHIP	0.1uF	20%	50V	
C216	1-117-749-11	FILM CHIP	0.1uF	20%	50V	
C219	1-107-823-11	CERAMIC CHIP	0.47uF	10%	16V	
C220	1-107-823-11	CERAMIC CHIP	0.47uF	10%	16V	
C221	1-107-826-11	CERAMIC CHIP	0.1uF	10%	16V	
C222	1-115-566-11	CERAMIC CHIP	4.7uF	10%	10V	
C223	1-162-970-11	CERAMIC CHIP	0.01uF	10%	25V	
C224	1-107-823-11	CERAMIC CHIP	0.47uF	10%	16V	
C225	1-115-566-11	CERAMIC CHIP	4.7uF	10%	10V	
C226	1-162-970-11	CERAMIC CHIP	0.01uF	10%	25V	
C227	1-107-826-11	CERAMIC CHIP	0.1uF	10%	16V	
		< CONNECTOR >				
CN201	1-778-330-21	PIN, CONNECTOR (PC BOARD) 2P				
CN203	1-770-542-21	CONNECTOR, FFC/FPC 40P				
CN204	1-537-439-11	TARMINAL BOARD, CONNECTOR				
		< DIODE >				
D202	8-719-073-01	DIODE MA111-TX				
D203	8-719-073-01	DIODE MA111-TX				
D204	8-719-062-16	DIODE 01ZA8.2(TPL3)				
D205	8-719-062-16	DIODE 01ZA8.2(TPL3)				
D206	8-719-073-01	DIODE MA111-TX				
		< IC >				
IC201	8-759-521-35	IC TL5001CDR				
IC202	8-759-075-70	IC TA75S393F-TE85R				
IC203	8-759-574-64	IC MJM555V (TE2)				
		< COIL >				
L201	1-414-863-11	INDUCTOR 4.7uH				
L202	1-411-705-11	INDUCTOR 22uH				
L203	1-415-929-21	INDUCTOR 100uH				
		< TRANSISTOR >				
Q201	8-729-037-74	TRANSISTOR UN9213J-(K8).SO				
Q202	8-729-037-74	TRANSISTOR UN9213J-(K8).SO				
Q203	8-729-037-61	TRANSISTOR UN9113J-(K8).SO				
Q204	8-729-037-74	TRANSISTOR UN9213J-(K8).SO				
Q205	8-729-037-52	TRANSISTOR 2SD2216J-QR(TX).SO				
Q206	8-729-037-52	TRANSISTOR 2SD2216J-QR(TX).SO				
Q207	8-729-037-74	TRANSISTOR UN9213J-(K8).SO				
Q208	8-729-037-74	TRANSISTOR UN9213J-(K8).SO				
Q209	8-729-037-52	TRANSISTOR 2SD2216J-QR(TX).SO				
Q210	8-729-823-84	TRANSISTOR FP102-TL				
Q211	8-729-042-87	TRANSISTOR FP211-TL				
Q212	8-729-042-58	TRANSISTOR UN9111J-(K8).SO				
Q213	8-729-073-52	TRANSISTOR 2SD2216J-QR(TX).SO				
Q214	8-729-073-52	TRANSISTOR 2SD2216J-QR(TX).SO				
Q215	8-729-037-74	TRANSISTOR UN9213J-(K8).SO				
Q216	8-729-037-74	TRANSISTOR UN9213J-(K8).SO				
Q217	8-729-037-74	TRANSISTOR UN9213J-(K8).SO				
Q218	8-729-037-74	TRANSISTOR UN9213J-(K8).SO				
		< RESISTOR >				
R201	1-218-867-11	RES,CHIP	6.8K	0.50%	1/16W	
R202	1-218-881-11	RES,CHIP	27K	0.50%	1/16W	
R203	1-216-829-11	METAL CHIP	4.7K	5%	1/16W	
R204	1-216-035-00	METAL CHIP	270	5%	1/10W	
R205	1-218-897-11	RES,CHIP	120K	0.50%	1/16W	
R206	1-218-867-11	RES,CHIP	6.8K	0.50%	1/16W	
R207	1-216-841-11	METAL CHIP	47K	5%	1/16W	
R208	1-218-851-11	RES,CHIP	1.5K	0.50%	1/16W	
R209	1-216-823-11	METAL CHIP	1.5K	5%	1/16W	
R210	1-218-857-11	RES,CHIP	2.7K	0.50%	1/16W	
R211	1-216-829-11	METAL CHIP	4.7K	5%	1/16W	
R212	1-216-823-11	METAL CHIP	1.5K	5%	1/16W	
R213	1-216-829-11	METAL CHIP	4.7K	5%	1/16W	
R214	1-216-845-11	METAL CHIP	100K	5%	1/16W	
R215	1-216-833-11	METAL CHIP	10K	5%	1/16W	
R217	1-216-837-11	METAL CHIP	22K	5%	1/16W	
R218	1-216-817-11	METAL CHIP	470	5%	1/16W	
R219	1-218-825-11	RES,CHIP	120	0.50%	1/16W	
R222	1-216-810-11	METAL CHIP	120	5%	1/16W	
R223	1-216-817-11	METAL CHIP	470	5%	1/16W	
R224	1-216-837-11	METAL CHIP	22K	5%	1/16W	
R225	1-216-816-11	METAL CHIP	390	5%	1/16W	
R227	1-216-035-00	METAL CHIP	270	5%	1/10W	
R228	1-216-849-11	METAL CHIP	220K	5%	1/16W	
R229	1-216-857-11	METAL CHIP	1M	5%	1/16W	
R230	1-216-841-11	METAL CHIP	47K	5%	1/16W	
R231	1-216-841-11	METAL CHIP	47K	5%	1/16W	
R232	1-216-841-11	METAL CHIP	47K	5%	1/16W	
R233	1-216-841-11	METAL CHIP	47K	5%	1/16W	
R234	1-216-837-11	METAL CHIP	22K	5%	1/16W	
R235	1-216-833-11	METAL CHIP	10K	5%	1/16W	
R236	1-216-841-11	METAL CHIP	47K	5%	1/16W	
R237	1-216-857-11	METAL CHIP	1M	5%	1/16W	
		< TRANSFORMER >				
⚠T201	1-431-547-11	TRANSFORMER, DC/AC INVERTER				

: Points added parts. : Points changed parts.

Page	OLD			NEW		
	Ref. No.	Part No.	Description	Ref. No.	Part No.	Description
		ACCESSORIES				
		**********				
6-30E	⚠	1-769-608-11	CORD, POWER (D300E/D900E)	⚠	1-769-608-11	CORD, POWER (D300E:E/D900E:E)
				⚠	1-690-827-12	CORD, POWER (D300E:AEP/D900E:AEP)
				⚠	1-775-843-21	CORD, POWER (D300E:UK/D900E:UK)

Note : The components identified by mark ⚠ or dotted line with mark ⚠ are critical for safety.
Replace only with part number specified.

9-974-068-82

Sony Corporation
Personal A&V Products Company

98K1668-1
Printed in Japan ©1998.11
Published by Quality Engineering Dept.
(Osaki East)

GV-D300/D300E/D900/D900E

SONY

SERVICE MANUAL

1999. 08

US Model
Canadian Model
GV-D300/D900
AEP Model
UK Model
E Model
GV-D300E/D900E

CORRECTION-2

Correct your service manual as shown below.
(99-014)

- Correction of pin numbers of CB-61 board CN9922.
- Change of TG7 guide in the D mechanism.

: Changed portion.

Page	INCORRECT	CORRECT
4-10	**4-2. PRINTED WIRING BOARDS AND SCHEMATIC DIAGRAMS** **CB-61 BOARD (SIDE B)** **<LOCATION B-21>** 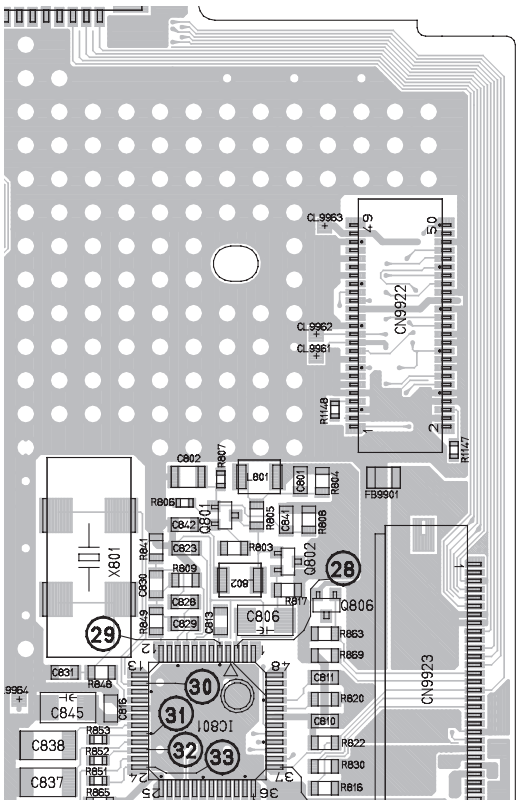	**4-2. PRINTED WIRING BOARDS AND SCHEMATIC DIAGRAMS** **CB-61 BOARD (SIDE B)** **<LOCATION B-21>** 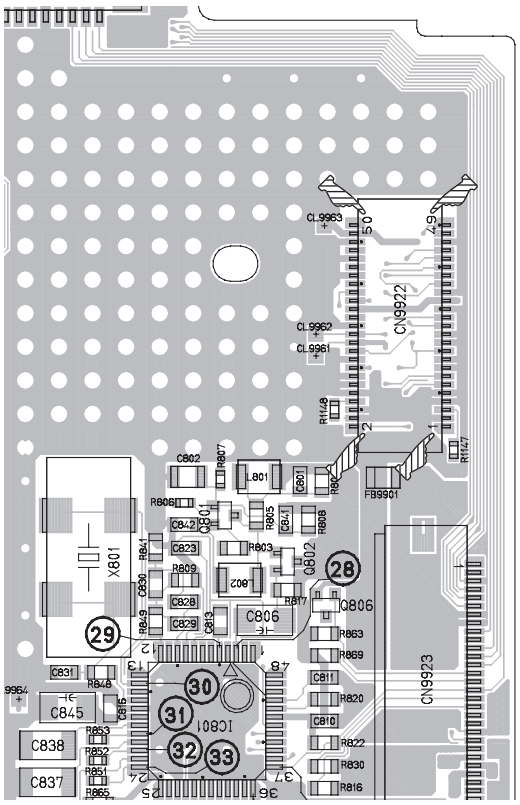

[SUPPLEMENT]

File this supplement with the Service Manual.

- The TG7 guide of the D mechanism is changed.

: Changed portion. : Deleted portion.

Page	Old	New
6-5	**SECTION 6. REPAIR PARTS LIST** **6-1-5. LS CHASSIS BLOCK SECTION**	**SECTION 6. REPAIR PARTS LIST** **6-1-5. LS CHASSIS BLOCK SECTION**

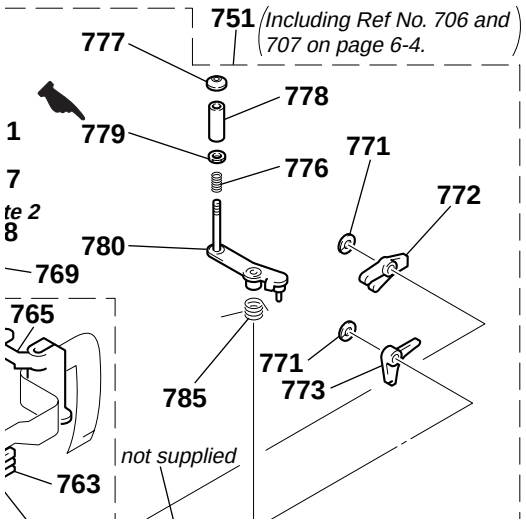

Ref. No.	Part No.	Description	Remarks
778	3-748-777-02	TG7	
779	3-964-614-01	FLANGE, TG7 LOWER	

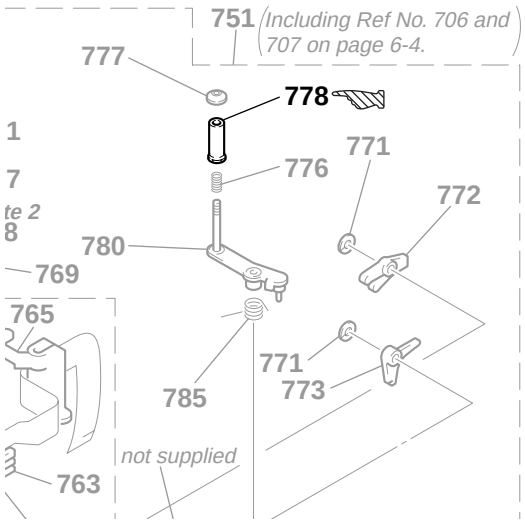

Ref. No.	Part No.	Description	Remarks
778	3-057-819-01	TG7 (INCLUDING 779)	

DELETE

99H1668-1
Printed in Japan ©1999.8
Published by Safety & Service Engineering Dept.

GV-D300/D300E/D900/D900E

SONY

SERVICE MANUAL

1999. 11

US Model
Canadian Model
GV-D300/D900
AEP Model
UK Model
E Model
GV-D300E/D900E

SUPPLEMENT-3

File this supplement-3 with the Service Manual.
(EV805153, EV805155, EVB03351, EVB03392)

- The FUSE block is separated from the CB-61 board of the part code suffix -15 and higher. The FUSE block is added as the FU-133 board. ..... (pages 1 to 15)
- CORRECTION ..... (page 16)

CB-61 BOARD (SIDE B)

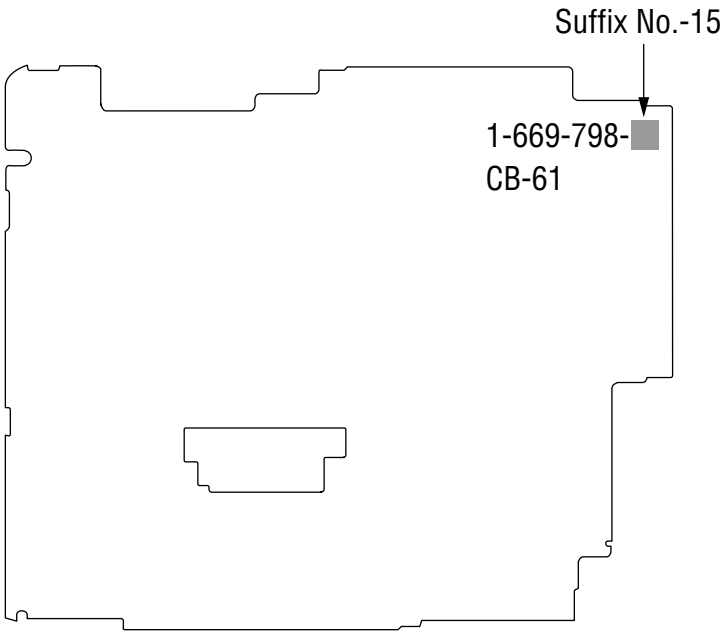

( ) : Page No. shown in ( ) indicates the page to refer on the original Service Manual

: Added portion. : Changed portion.

(Page 2-6E)

2-12. CIRCUIT BOARDS LOCATION

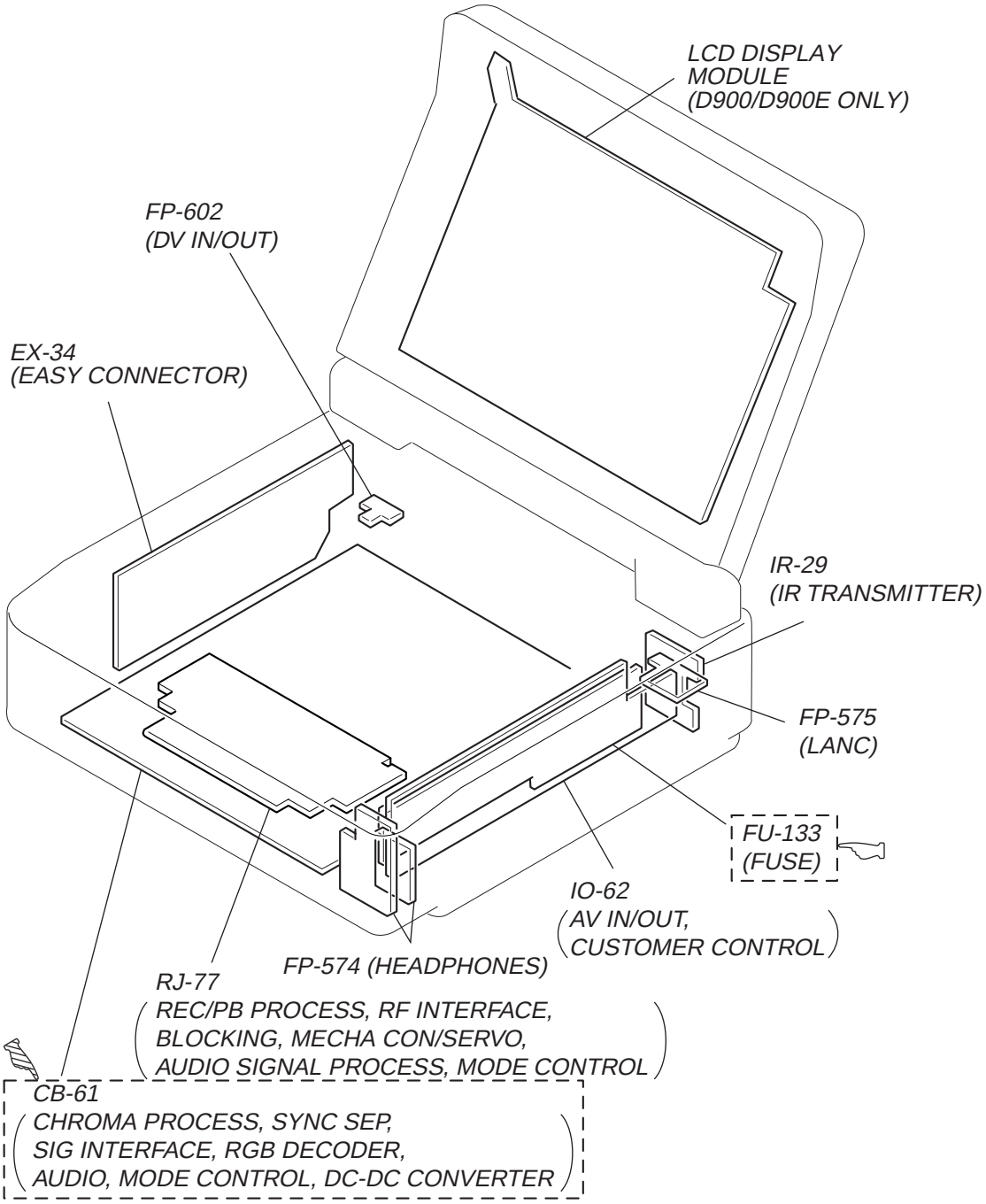
LCD DISPLAY MODULE (D900/D900E ONLY)
FP-602 (DV IN/OUT)
EX-34 (EASY CONNECTOR)
IR-29 (IR TRANSMITTER)
FP-575 (LANC)
FU-133 (FUSE)
IO-62 AV IN/OUT, CUSTOMER CONTROL
FP-574 (HEADPHONES)
RJ-77 REC/PB PROCESS, RF INTERFACE, BLOCKING, MECHA CON/SERVO, AUDIO SIGNAL PROCESS, MODE CONTROL
CB-61 CHROMA PROCESS, SYNC SEP, SIG INTERFACE, RGB DECODER, AUDIO, MODE CONTROL, DC-DC CONVERTER

(Page: 3-7)

3-3. POWER BLOCK DIAGRAM

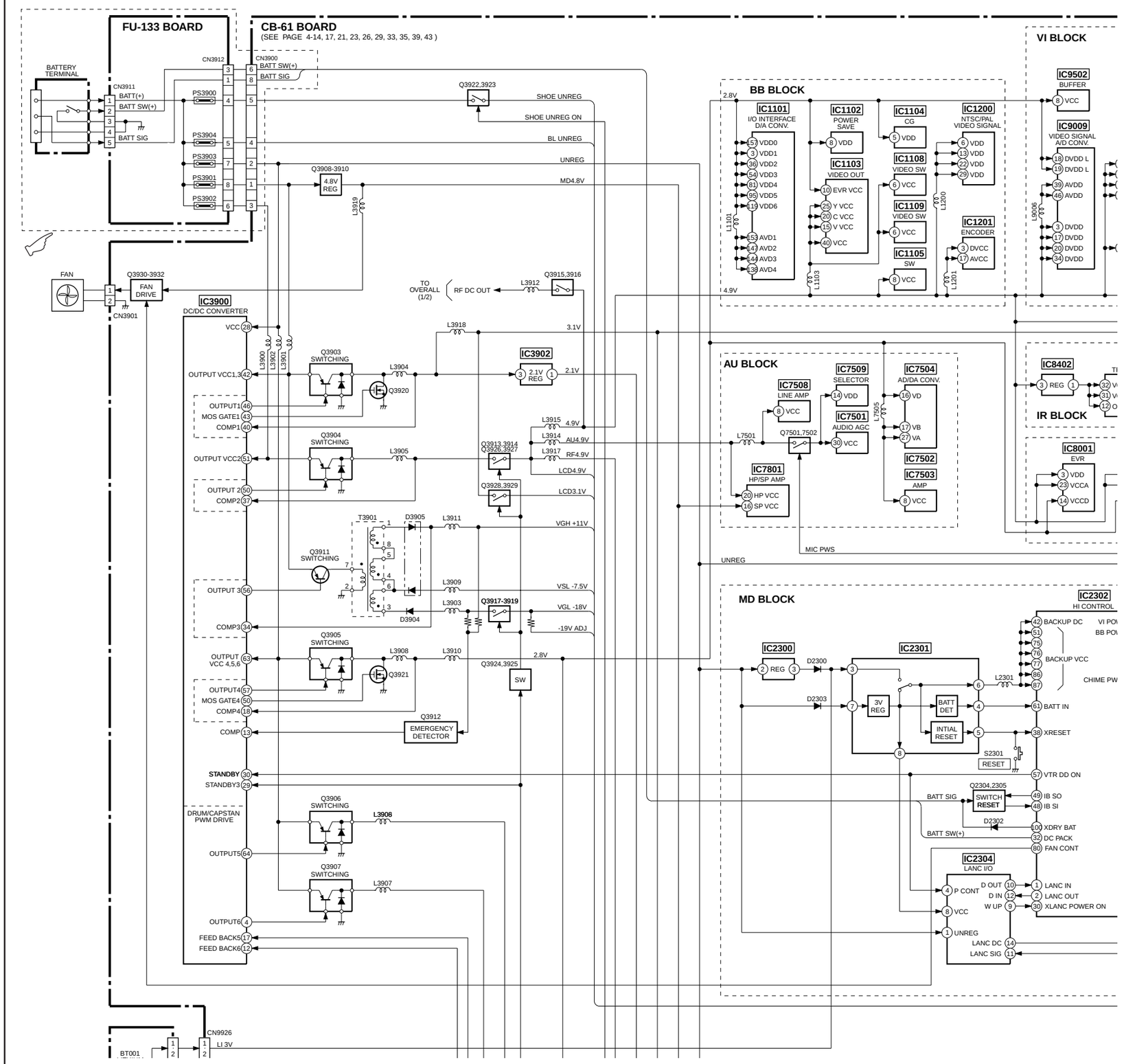

(Page: 4-2)

4-1. FRAME SCHEMATIC DIAGRAM

< LOCATION K-12 >

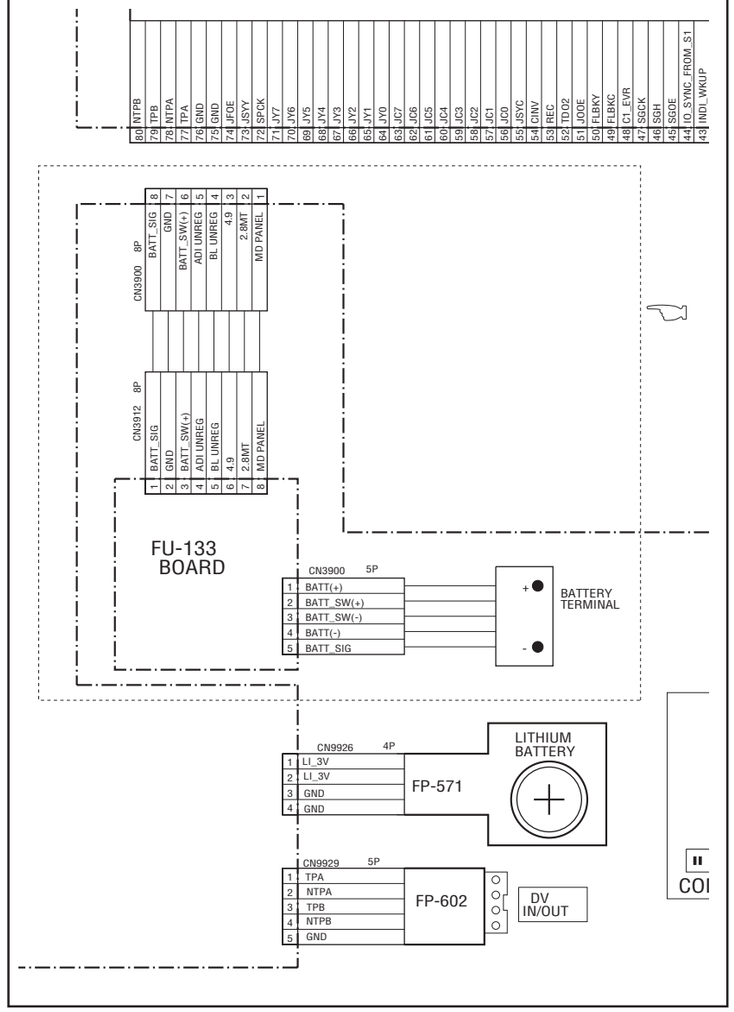

FU-133 (FUSE) PRINTED WIRING BOARD
— Ref. No. FU-133 Board; 10,000 Series —

There are few cases that the part printed on this diagram isn't mounted in this model.

FU-133 BOARD (SIDE A)

C3900 F-1
C3901 F-1

CN3912 A-1

D3901 F-2
D3902 E-2
D3903 F-2

PS3900 F-2
PS3901 F-3
PS3902 F-2
PS3903 F-2
PS3904 F-2

FU-133 BOARD (SIDE B)

CN3911 F-5

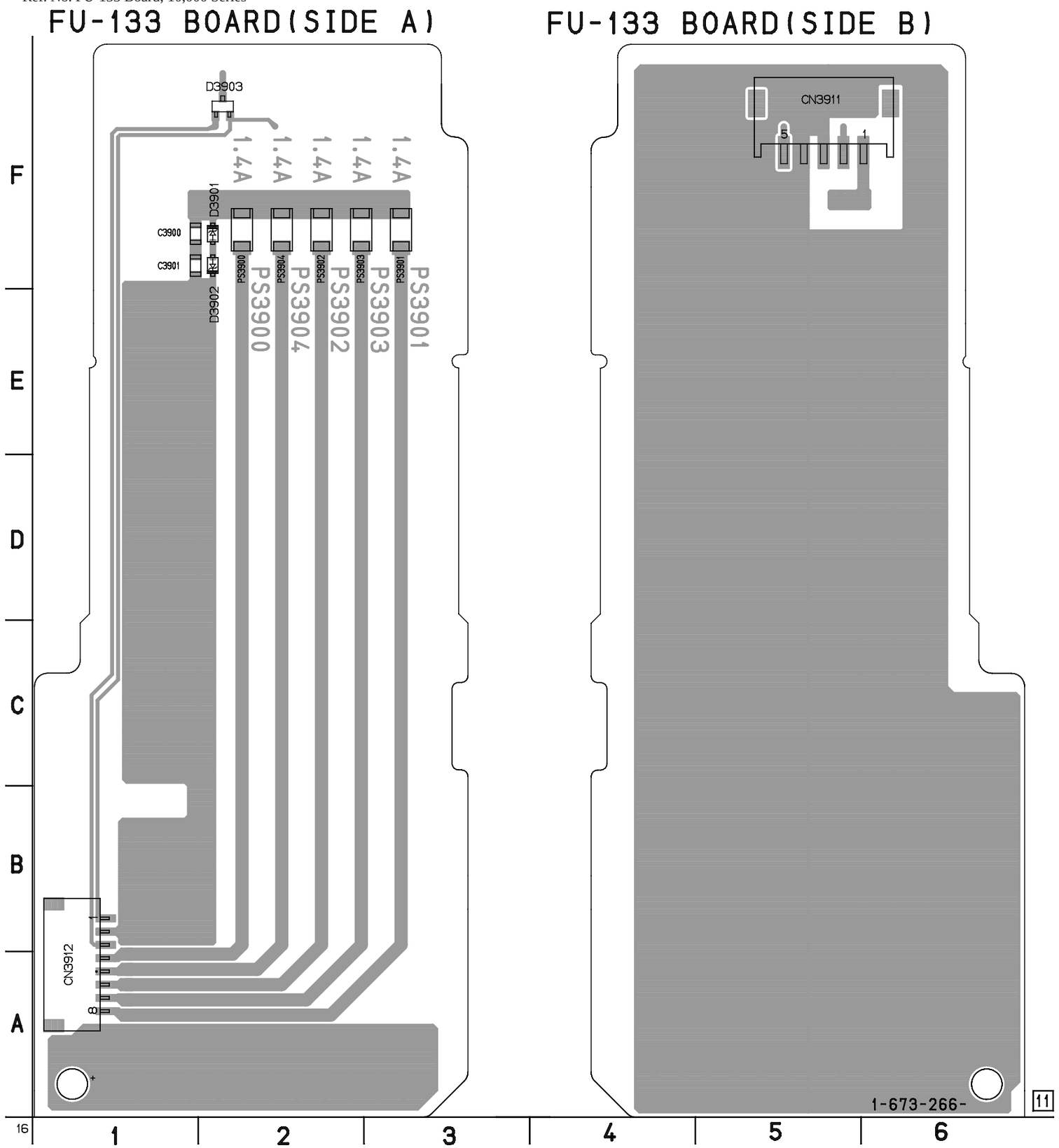

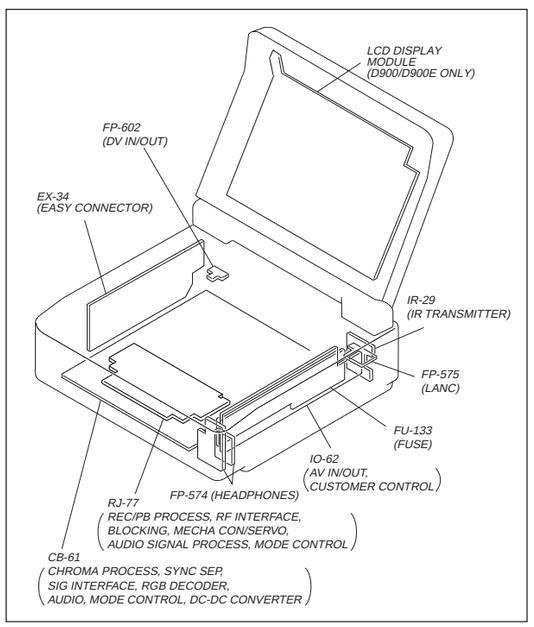
LCD DISPLAY MODULE (D900/D900E ONLY)
FP-602 (DV IN/OUT)
EX-34 (EASY CONNECTOR)
IR-29 (IR TRANSMITTER)
FP-575 (LANC)
FU-133 (FUSE)
IO-62 (AV IN/OUT, CUSTOMER CONTROL)
FP-574 (HEADPHONES)
RJ-77 (REC/PB PROCESS, RF INTERFACE, BLOCKING, MECHA CON/SERVO, AUDIO SIGNAL PROCESS, MODE CONTROL)
CB-61 (CHROMA PROCESS, SYNC SEP, SIG INTERFACE, RGB DECODER, AUDIO, MODE CONTROL, DC-DC CONVERTER)

< > : Page No. shown in < > indicates the page to refer on this Supplement-3.

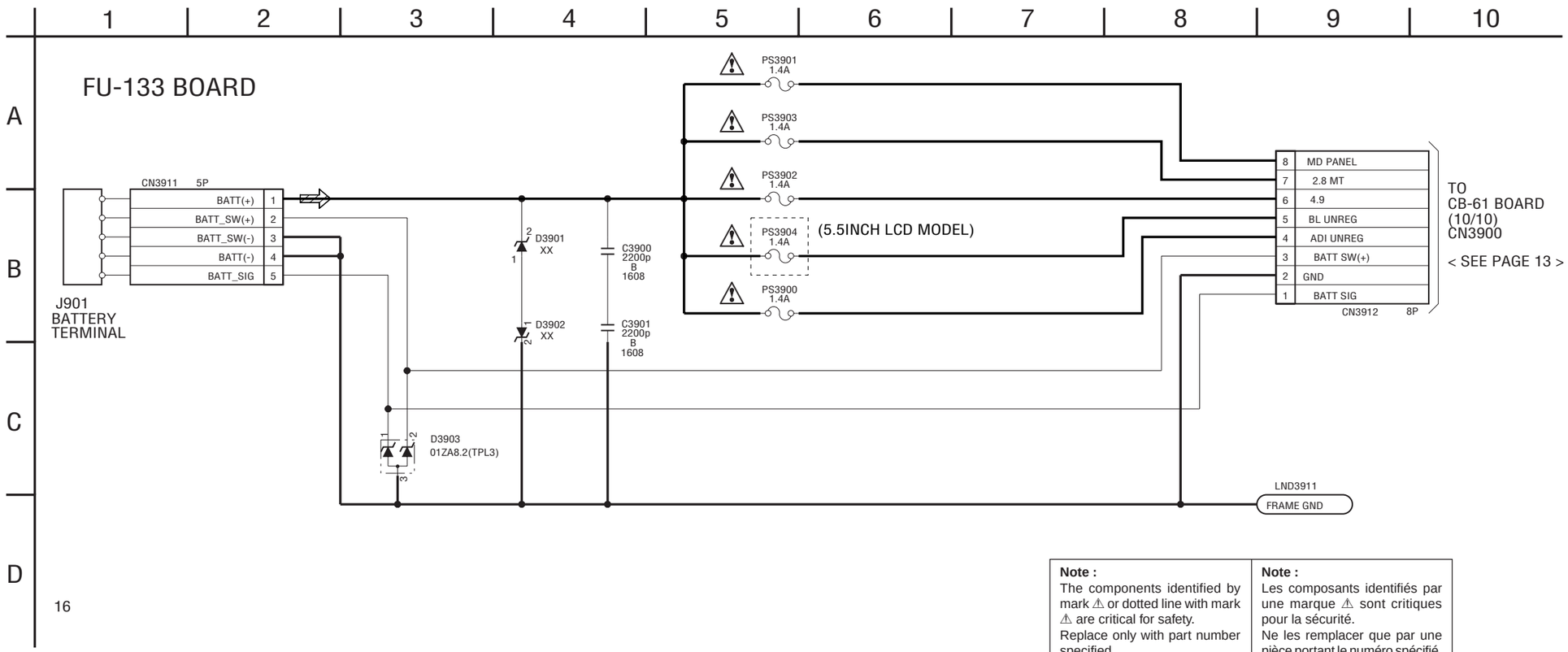

16

Note :
The components identified by mark ⚠ or dotted line with mark ⚠ are critical for safety.
Replace only with part number specified.

Note :
Les composants identifiés par une marque ⚠ sont critiques pour la sécurité.
Ne les remplacer que par une pièce portant le numéro spécifié.

CB-61 (CHROMA PROCESS, SYNC SEP, SIG INTERFACE, RGB DECODER, AUDIO, MODE CONTROL, DC-DC CONVERTER) PRINTED WIRING BOARD

— Ref. No. CB-61 Board; 10,000 Series —

There are few cases that the part printed on this diagram isn't mounted in this model.

CB-61 BOARD(SIDE A)

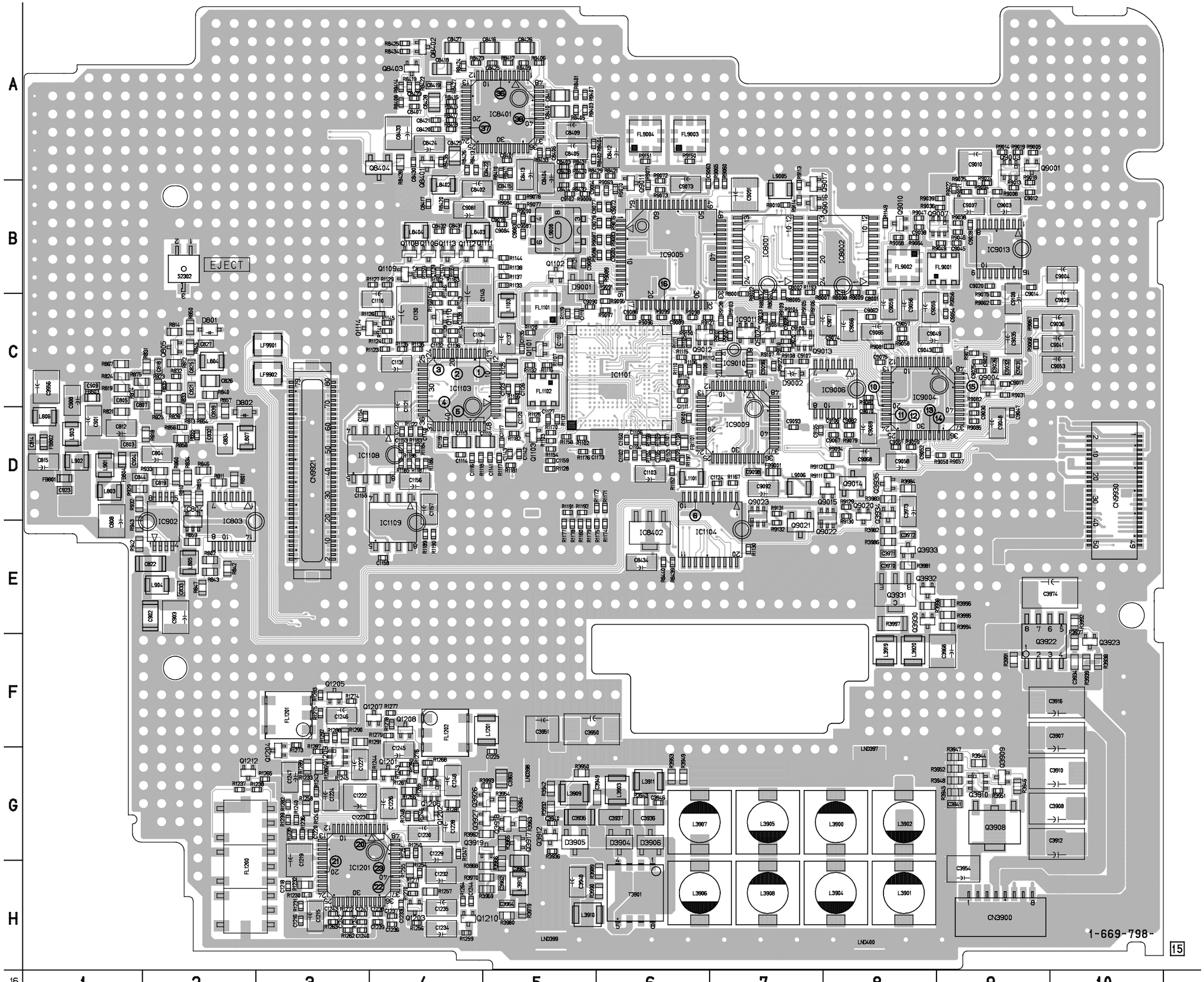

There are few cases that the part printed on this diagram isn't mounted in this model.

CB-61 BOARD(SIDE B)

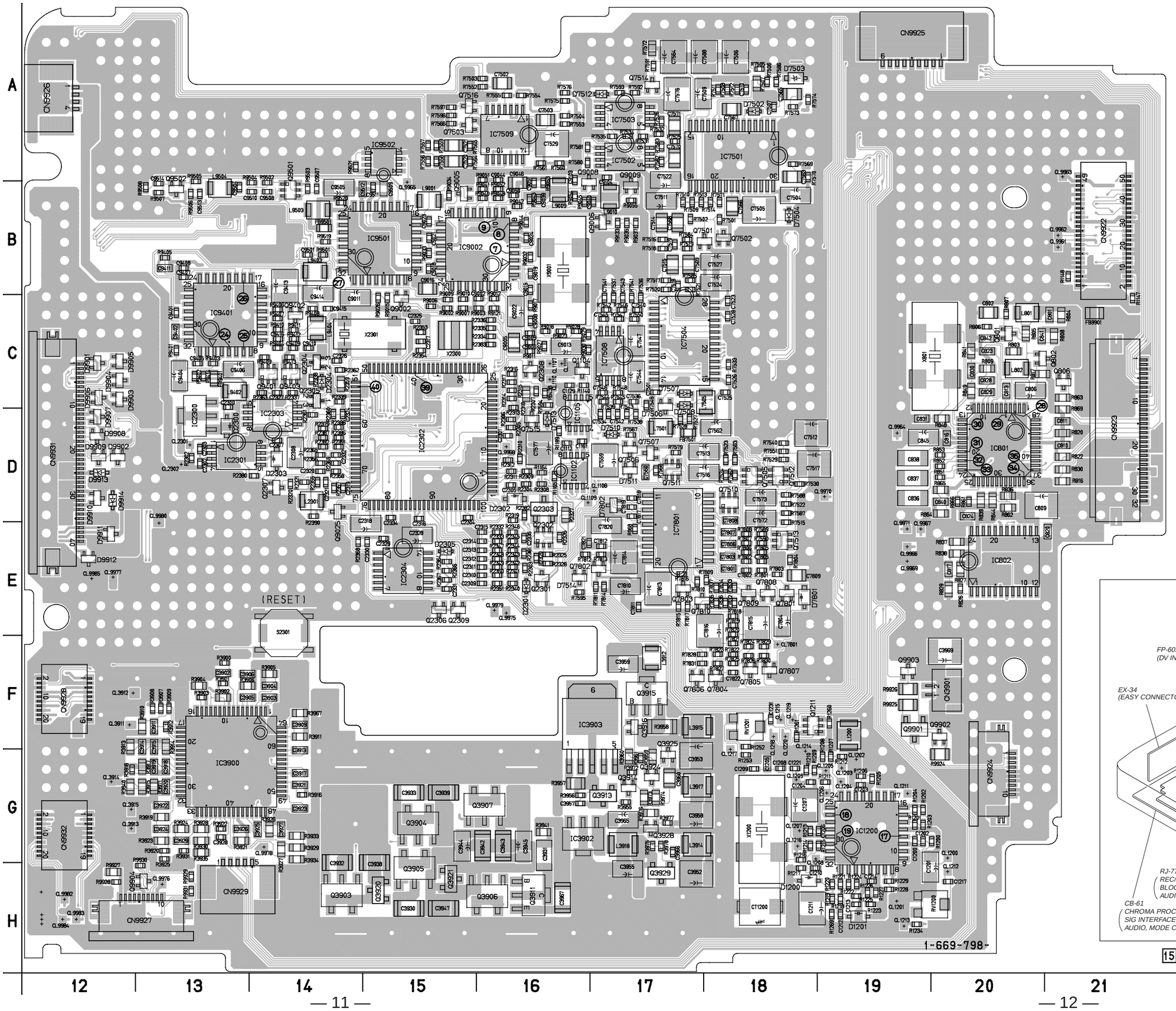

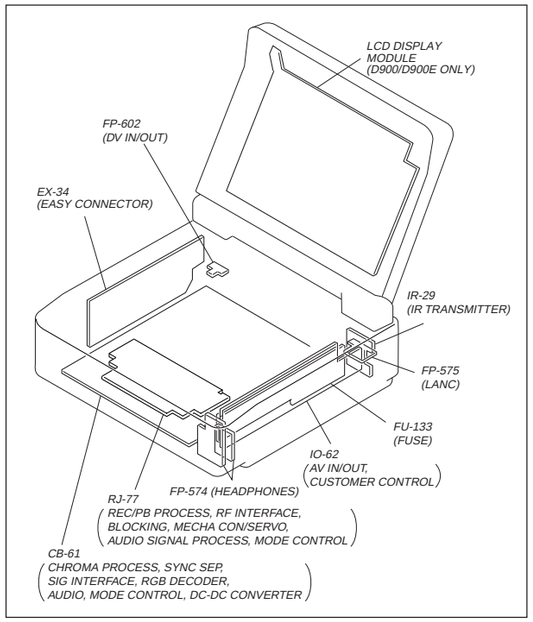
LCD DISPLAY MODULE (D900/D900E ONLY)
FP-602 (DV IN/OUT)
EX-34 (EASY CONNECTOR)
IR-29 (IR TRANSMITTER)
FP-575 (LANC)
FU-133 (FUSE)
IO-62 (AV IN/OUT, CUSTOMER CONTROL)
FP-574 (HEADPHONES)
RJ-77 (REC/PB PROCESS, RF INTERFACE, BLOCKING, MECHA CON/SERVO, AUDIO SIGNAL PROCESS, MODE CONTROL)
CB-61 (CHROMA PROCESS, SYNC SEP, SIG INTERFACE, RGB DECODER, AUDIO, MODE CONTROL, DC-DC CONVERTER)

15

( ) : Page No. shown in ( ) indicates the page to refer on the original Service Manual .

: Changed portion. < > : Page No. shown in < > indicates the page to refer on this Supplement-3.

(Page: 4-43)

SCHEMATIC DIAGRAM

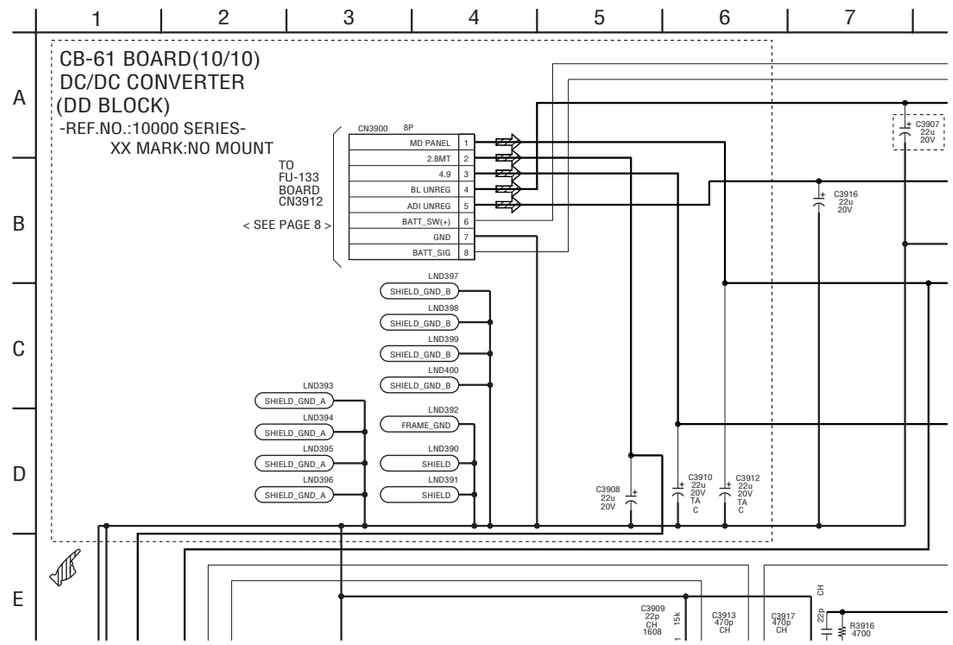

: Added portion.

(Page: 6-3)

6-1-3. MECHANISM DECK ASSEMBLY

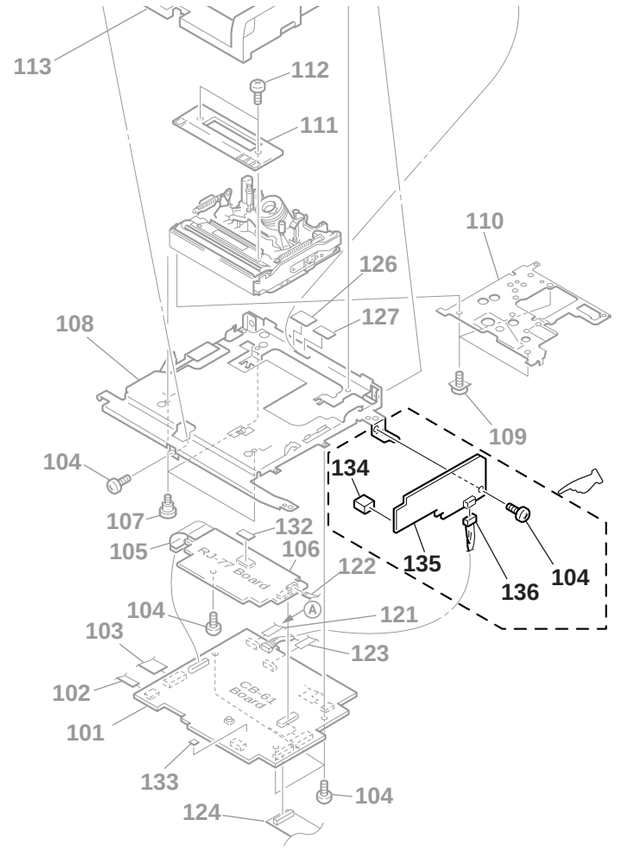

Ref. No.	Part No.	Description	Remarks
134	3-054-318-01	SPACER, FUSE	
135	A-7073-845-A	FU-133 BOARD, COMPLETE (D900/D900E)	
135	A-7073-980-A	FU-133 BOARD, COMPLETE (D300/D300E)	
136	1-959-638-11	HARNESS (FC-109)	

6-2. ELECTRICAL PARTS LIST

: Changed portion. : Deleted portion.

Page	Suffix No -11 to -14 TYPE				Suffix No -15 TYPE			
	Ref. No.	Part No.	Description	Remarks	Ref. No.	Part No.	Description	Remarks
6-8		A-7073-601-A	CB-61 BOARD, COMPLETE (D900)			A-7074-273-A	CB-61 BOARD, COMPLETE (D900)	
			**********				**********	
		A-7073-602-A	CB-61 BOARD, COMPLETE (D900E)			A-7074-255-A	CB-61 BOARD, COMPLETE (D900E: AEP,UK)	
			**********				**********	
						A-7074-256-A	CB-61 BOARD, COMPLETE (D900E: E)	
							**********	
		A-7073-605-A	CB-61 BOARD, COMPLETE (D300)			A-7074-274-A	CB-61 BOARD, COMPLETE (D300)	
			**********				**********	
		A-7073-606-A	CB-61 BOARD, COMPLETE (D300E)			A-7074-257-A	CB-61 BOARD, COMPLETE (D300E: AEP, UK)	
			**********				**********	
						A-7074-258-A	CB-61 BOARD, COMPLETE (D300E: E)	
							**********	
				(Ref.No.: 10,000 Series)				(Ref.No.: 10,000 Series)
6-10			< CAPACITOR >					
	C3900	1-164-939-11	CERAMIC CHIP 0.0022uF 10% 16V				DELETE	
	C3901	1-164-939-11	CERAMIC CHIP 0.0022uF 10% 16V					

: Added portion. : Changed portion. : Deleted portion.

Page	Suffix No -11 to -14 TYPE				Suffix No -15 TYPE			
	Ref. No.	Part No.	Description	Remarks	Ref. No.	Part No.	Description	Remarks
6-12			< CONNECTOR >				< CONNECTOR >	
	CN3900	1-569-775-21	PIN, CONNECTOR 5P		CN3900	1-770-625-21	PIN, CONNECTOR 8P	
			< DIODE >					
	D3903	8-719-062-16	DIODE 01ZA8.2(TPL3)		DELETE			
6-14			< IC LINK >					
	⚠ PS3900	1-533-760-21	FUSE (SMD) 1.4A/24V (D300/D900)		DELETE			
	⚠ PS3900	1-533-761-21	LINK, IC (SMD) 1.4A/24V (D300E/D900E)					
	⚠ PS3901	1-533-760-21	FUSE (SMD) 1.4A/24V (D300/D900)					
	⚠ PS3901	1-533-761-21	LINK, IC (SMD) 1.4A/24V (D300E/D900E)					
	⚠ PS3902	1-533-760-21	FUSE (SMD) 1.4A/24V (D300/D900)					
	⚠ PS3902	1-533-761-21	LINK, IC (SMD) 1.4A/24V (D300E/D900E)					
	⚠ PS3903	1-533-760-21	FUSE (SMD) 1.4A/24V (D300/D900)					
	⚠ PS3903	1-533-761-21	LINK, IC (SMD) 1.4A/24V (D300E/D900E)					
	⚠ PS3904	1-533-760-21	FUSE (SMD) 1.4A/24V (D300/D900)					
	⚠ PS3904	1-533-761-21	LINK, IC (SMD) 1.4A/24V (D300E/D900E)					
6-17			< RESISTOR >					
	R1173	1-164-943-11	CERAMIC CHIP 0.01MF 10% 16V		DELETE			
						A-7073-845-A	FU-133 BOARD, COMPLETE (D900/D900E)	
							**********	
						A-7073-980-A	FU-133 BOARD, COMPLETE (D300/D300E)	
							**********	
							(Ref.No.: 10,000 Series)	
							< CAPACITOR >	
					C3900	1-162-966-11	CERAMIC CHIP 0.0022uF 10% 16V	
					C3901	1-162-966-11	CERAMIC CHIP 0.0022uF 10% 16V	
							< CONNECTOR >	
					CN3911	1-569-775-21	PIN, CONNECTOR 5P	
					CN3912	1-770-625-21	PIN, CONNECTOR (PC BOARD) 8P	
							< DIODE >	
					D3903	8-719-062-16	DIODE 01ZA8.2(TPL3)	
							< FUSE >	
					⚠ PS3900	1-533-760-21	FUSE (SMD) 1.4A/24V	
					⚠ PS3901	1-533-760-21	FUSE (SMD) 1.4A/24V	
					⚠ PS3902	1-533-760-21	FUSE (SMD) 1.4A/24V	
					⚠ PS3903	1-533-760-21	FUSE (SMD) 1.4A/24V	
					⚠ PS3904	1-533-760-21	FUSE (SMD) 1.4A/24V (D900/D900E)	

[CORRECTION]

Correct your service manual as shown below.

: Added portion. : Changed portion.

(Page: 4-15)

CB-61 BOARD (1/10) < LOCATION D-12 >

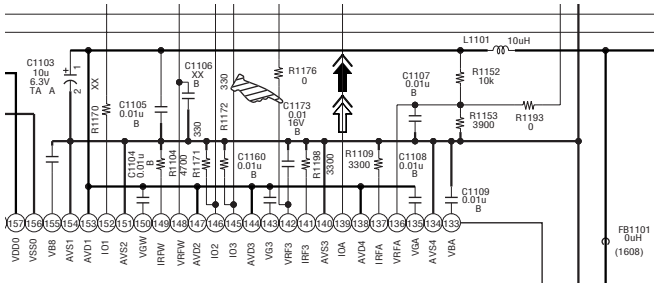

(Page: 4-44)

CB-61 BOARD (10/10) < LOCATION B-23 >

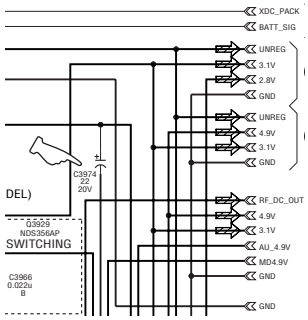

(Page: 4-43)

CB-61 BOARD (10/10) < LOCATION D-9 >

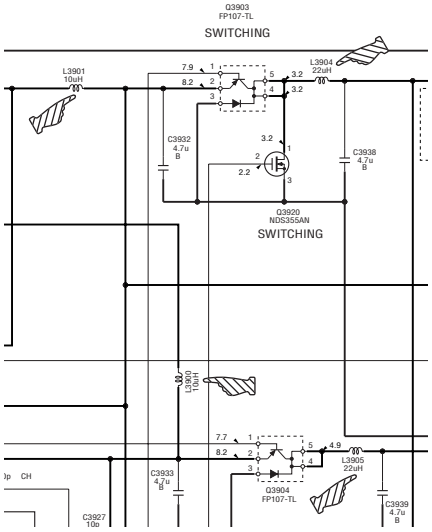

(Page: 4-43,44)

CB-61 BOARD (10/10) < LOCATION N-13 >

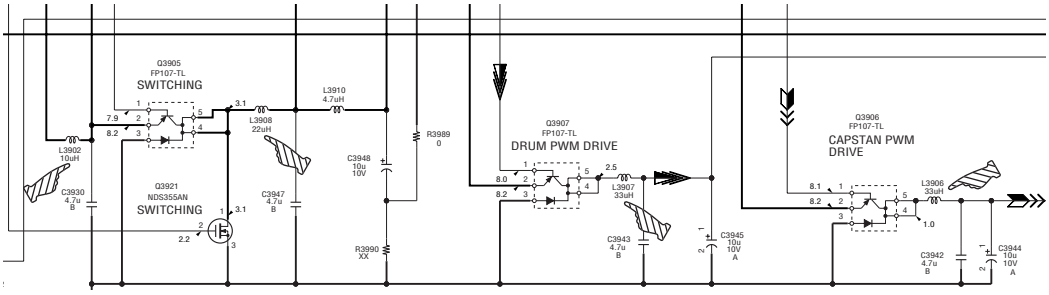

Page	INCORRECT				CORRECT			
	Ref. No.	Part No.	Description	Remarks	Ref. No.	Part No.	Description	Remarks
6-9			CB-61 BOARD, COMPLETE ********** < CAPACITOR >				CB-61 BOARD, COMPLETE ********** < CAPACITOR >	
	———	———	———		C1173	1-164-943-11	CERAMIC CHIP 0.01uF 10% 16V	
6-12			< COIL >				< COIL >	
	L3900	1-409-529-41	INDUCTOR 0uH		L3900	1-409-529-41	INDUCTOR 10uH	
	L3901	1-409-529-41	INDUCTOR 0uH		L3901	1-409-529-41	INDUCTOR 10uH	
	L3902	1-409-529-41	INDUCTOR 0uH		L3902	1-409-529-41	INDUCTOR 10uH	
	L3904	1-424-674-11	INDUCTOR 0uH		L3904	1-424-674-11	INDUCTOR 22uH	
6-13	L3905	1-424-674-11	INDUCTOR 0uH		L3905	1-424-674-11	INDUCTOR 22uH	
	L3906	1-409-532-41	INDUCTOR 0uH		L3906	1-409-532-41	INDUCTOR 33uH	
	L3907	1-409-532-41	INDUCTOR 0uH		L3907	1-409-532-41	INDUCTOR 33uH	
	L3908	1-424-674-11	INDUCTOR 0uH		L3908	1-424-674-11	INDUCTOR 22uH	

Sony Corporation
Personal VIDEO Products Company
9-974-068-83
99K1668-1
Printed in Japan ©1999.11
Published by Safety & Service Engineering Dept.

Revision History

Ver.	Date	History	Contents	S.M. Rev. issued
1.0	1998.05	Official Release	—	—
1.1	1998.09	Supplement-1	• Change of adjustment data • Part policy change to supply LCD block and suffix no. change	No
1.2	1998.11	Supplement-2	• Addition of the Timer Circuit to the EX-34 Board. • Change of Accessories.	No
1.3	1999.03	Correction-1	Change of adjustment data S.M. correction: Page 5-2	Yes
1.4	1999.08	Correction-2	• Correction of pin numbers of CB-61 board CN9922. • Change of TG7 guide in the D mechanism.	No
1.5	1999.11	Supplement-3	• The FUSE block is separated from the CB-61 board of the part code suffix-15 and higher. The FUSE block is added as the FU-133 board. • CORRECTION	No
1.6	2003.06	Correction-3	Addtion of the part S.M. correction: Page 6-12	Yes